CHARACTERIZATION OF A HYBRID ELECTRIC MOBILITY AS A SERVICE VEHICLE

A Thesis
Presented to
The Academic Faculty

by

Noah Schaich

In Partial Fulfillment
of the Requirements for the Degree
Master of Science in the
Mechanical Engineering

Georgia Institute of Technology
May 2020

CHARACTERIZATION OF A HYBRID ELECTRIC MOBILITY AS A SERVICE VEHICLE

Approved by:

Dr. Michael Leamy, Advisor
School of Mechanical Engineering
Georgia Institute of Technology

Dr. Kenneth A. Cunefare
School of Mechanical Engineering
Georgia Institute of Technology

Dr. David Taylor
School of Electrical and Computer Engineering
Georgia Institute of Technology

Date Approved: April 16th, 2020

ACKNOWLEDGEMENTS

I would like to thank the core members of the Georgia Tech EcoCAR team for their hard work and dedication to our team. I would also like to thank our faculty advisors, mentors, competition organizers, and all of the sponsors that made this work possible.

TABLE OF CONTENTS

LIST OF TABLES

LIST OF FIGURES

LIST OF SYMBOLS AND ABBREVIATIONS

AVTC	Advanced vehicle technology competition
BSFC	Brake specific fuel consumption
CAN	Controller area network
CAV	Connected and automated vehicles
ECMS	Equivalent consumption minimization strategy
EM	Electric Machine
GM	General Motors
HEV	Hybrid electric vehicle
HSC	Hybrid supervisory controller
HV	High voltage
ICE	Internal combustion engine
MaaS	Mobility-as-a-Service
MABx	MicroAutoBox II
LV	Low Voltage
P0	Refers to EM positioning ahead of the ICE in a hybrid electric vehicle
P4	Refers to EM positioning on separate axle of ICE in a hybrid electric vehicle

SAE **Society of automotive engineers**

SOC **State of charge**

SUMMARY

This thesis focuses on work done during the first two years of the EcoCAR Mobility Challenge Competition. Georgia Tech is one of 12 schools participating with the goal of building a hybrid electric mobility-as-a-service vehicle with SAE level 2 autonomy by the end of the four-year competition. The first year of the competition is focused on modeling and research to choose a hybrid architecture that the team will build and refine during the next three years of the competition. A pre-built Simulink vehicle model was modified to investigate architectures of interest, validated against published fuel economy data, and then used to compare the fuel economy of several possible hybrid vehicle architectures with varying components. The Simulink model, packaging analyses, and other metrics deemed important by the team were used select a P0P4 parallel through-the-road hybrid as the team's hybrid vehicle architecture.

Year 2 of the competition focused on modifying the donor vehicle, a 2019 Chevrolet Blazer, based on design decisions made during Year 1. The design, analysis, and integration of a mount for one of the vehicle's electric machines is detailed in this paper. A topology optimization software was used to refine the design of the mount and a finite element analysis was performed to ensure the mount could withstand competition required load cases. A similar process was used for the various other components that were designed and built by student team members during Year 2 of the competition. A brief overview of the vehicle's low voltage (LV) electrical system and controller area network (CAN) is also discussed.

CHAPTER 1. INTRODUCTION

1.1 Introduction to EcoCAR and AVTCs

The research and work performed to prepare this thesis was done as part of the EcoCAR Mobility Challenge Competition. This competition is the latest in a string of Advanced Vehicle Technology Competitions (AVTCs) organized by the U.S. Department of Energy with substantial support from industry sponsors. The competitions, which started in the 1980s, have always had a focus on advanced vehicle systems, including alternative fuels such as methane and propane. The EcoCAR Mobility Challenge tasks 12 university teams with re-engineering and building a hybridized and semi-autonomous 2019 Chevrolet Blazer. An additional technology that this competition seeks to further develop is Mobility-as-a-Service (MaaS), in which vehicles can function as ride-share and ride-hail vehicles and can exist in on-demand fleets that drivers can access only when needed.

The competition is divided into four separate year-long competitions that consist of pre-competition reports that document the team's progress as well as a year-end competition. In Year 1, the year-end competition consisted of presentations given to competition organizers and industry experts that highlighted the work done throughout the previous year. In Years 2-4, the year-end competition consists of dynamic events that test the vehicle's ability to function as intended as well as several presentations that document the team's work throughout the year.

An overarching goal of the competition is to encourage teams to follow the EcoCAR Vehicle Development Process, which is a scaled down version of a similar process used by General Motors to design and build vehicles sold in the global market. During Year 1, the design phase, teams are expected to identify a customer, choose a hybrid vehicle architecture, select a connected and automated vehicles (CAVs) hardware, and then move towards designing the control system and mechanical integration into the donated vehicle. Year 2, the integration phase, is heavily focused on carrying out all of the team-designed changes and implementing them on the vehicle. This includes finalizing all mechanical subsystems and hardware designs, and modifying the vehicle based on the those designs. By the end of Year 2, it is expected that the team's propulsion system will be at 65% functionality and the CAVs system will be at 50% functionality. At 65% functionality, the propulsion system should have all components safely integrated in the vehicle and all torque-producing components should be capable of producing torque. However, components can operate with limited functionality and more advanced control methods to optimize fuel economy may not be implemented.

The final two years of the competition focus on refinements of the propulsion system and further development of the CAVs features implemented on the vehicle. By the end of Year 3, the propulsion system should operate like a normal consumer vehicle featuring a high level of reliability, advanced energy management strategies to allow for optimized fuel economy, and a consumer acceptable level of drivability. Year 4 of the competition will focus heavily on the final implementation and testing of the team-added CAVs technologies to the donor vehicle. By the end of Year 4, the CAVs system should feature a refined level of linear autonomy that is acceptable to a consumer while also obtaining a higher fuel economy. The vehicle should be able to connect to other vehicles and roadside vehicle to anything (V2X) units and also incorporate a Human Machine Interface (HMI) that enables the team's target market to learn about and use the vehicle's CAVs features.

This thesis serves to document work performed during the first two years of the competition leading up to the Architecture Selection and Subsystem Design and Integration. A Simulink model was used to simulate various hybrid electric vehicle (HEV) architectures and the resulting fuel economy was compared. The model will be discussed, including the input to the model and main components, including the predictive driver, supervisory controller, and plant model of the vehicle. The design, analysis, and integration of a mount for one of the vehicle's electric machines will be detailed using a process that was replicated by members of the propulsion systems integration team when designing and installing their assigned components. Additionally, a brief overview of the vehicle's LV system and CAN architecture will be presented.

1.2 Principles of Hybrid Vehicles

A hybrid vehicle is any vehicle that utilizes two or more sources of energy. Most commonly, a hybrid vehicle's two sources of energy are gasoline and an electric battery pack. The energy from the gasoline is turned into power most commonly through an internal combustion engine (ICE). An electric machine (EM) is used to convert the electrical energy in the battery to torque and convert torque from the vehicle back into electrical energy that can be stored in the battery. Other sources of energy, such as hydrogen fuel cells, can also be used in hybrid vehicles.

The biggest advantage that hybrid vehicles offer over conventional vehicles powered by an internal combustion engine is the ability to load point shift. In a conventional vehicle, the ICE speed and torque directly correlate to the speed of the vehicle and the driver's torque request via the pedal input. With this simple configuration, the ICE is often operating in a non-ideal area of its operating range, which results in higher fuel consumption compared to an ICE operating at its optimal efficiency point. Figure 1 shows a typical brake specific fuel consumption (BSFC) map for an ICE, which is the amount of fuel required per hour for the amount of power that the ICE is producing (g/kWh) [1]. For example, given a cruising speed, the average vehicle may only need 25 Nm of torque to maintain that speed. If the ICE speed is 2,000 rpm, then the BSFC is 375 g/kWh. With a hybrid powertrain, the ICE could be positioned at a more optimal point, at the expense of it either producing too much torque or too little torque. However, the battery and electric machines can work to either absorb excess torque or supply extra torque to meet the demands of the driver while maintaining optimal operating conditions for the ICE. In this case, if the ICE torque is increased to 100 Nm while maintaining 2,000 rpm, the BSFC will be reduced to only 270 g/kWh.

It is important to note that although the BSFC decreases, the actual fuel consumption increases. In the conventional vehicle, 5.24 kW of power are being used, which correlates to an hourly fuel consumption of 1.97 kg/hr. In the hybrid vehicle, 20.95 kW of power are being used, which correlates to an hourly fuel consumption of 5.65 kg/hr. However, the additional power being produced by the ICE is not wasted. Instead, it is stored in the battery for use at a later time when the hybrid powertrain can either decrease the torque required from the ICE or eliminate it altogether if the vehicle is capable of an electric-only mode.

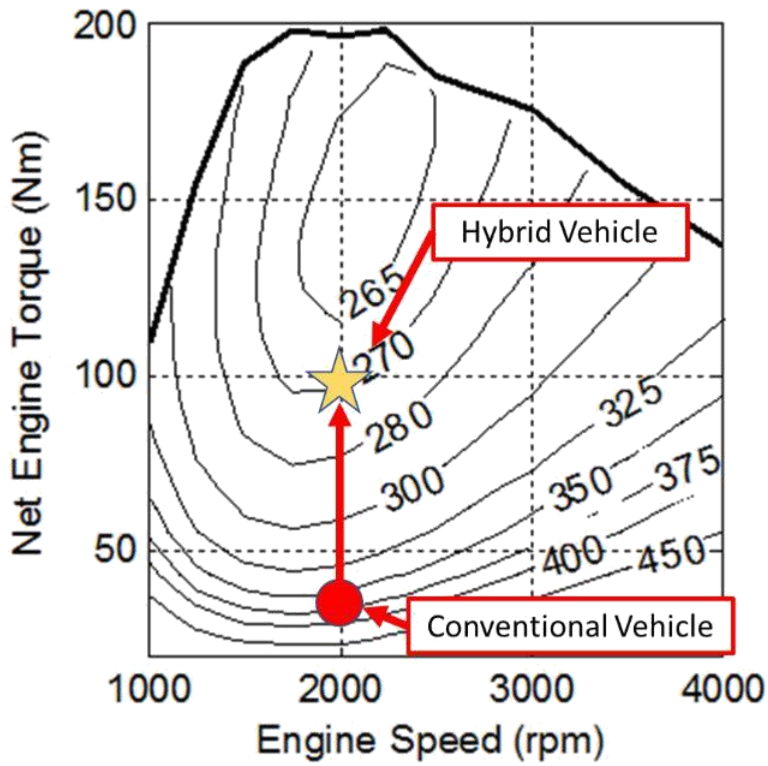

Figure 1. Brake specific fuel consumption map showing operating point of conventional vehicle vs. hybrid vehicle

In addition to load point shifting, hybrid vehicles are able to obtain increases in fuel efficiency due to regenerative braking, where the electric machine(s) are used to bring the car to a stop instead of friction brakes. Instead of the car's kinetic energy being converted to heat by the use of friction brakes, the electric machines can convert it to usable electric energy that can later be used to propel the car forwards. Most hybrid vehicle also benefit from ICE start-stop, which allows the ICE to be completely shut off during stop events such as red lights, traffic stops, and passenger loading/unloading. While these two features add to the ability of hybrid vehicles to yield higher fuel economy, the load point shifting has the largest impact on increasing fuel economy.

1.2.1 Types of HEV Architectures

There are three main types of hybrid electric vehicles: Series, Parallel, and Series-Parallel.

Series hybrid vehicles (Figure 2) have no mechanical connection between the ICE and the wheels of the vehicle. The ICE is mechanically connected to an electric machine (used as a generator) that converts the rotational power of the ICE to electrical power. This electrical power is then converted from AC to DC through an inverter and stored in a high voltage (HV) battery pack. In order to use this electrical energy, a second inverter must convert the DC power back to AC and a second electric machine (used primarily as a motor) converts the AC electrical power to torque that is sent to the wheels. The main advantage of this type of HEV architecture is that the ICE speed is completely decoupled from the vehicle speed, so the ICE can always operate at a speed that allows for optimal efficiency. However, there are significant conversion losses that occur since the mechanical power from the ICE must be converted to electric energy and then back into mechanical power. These conversion losses reduce the overall operating efficiency of the vehicle.

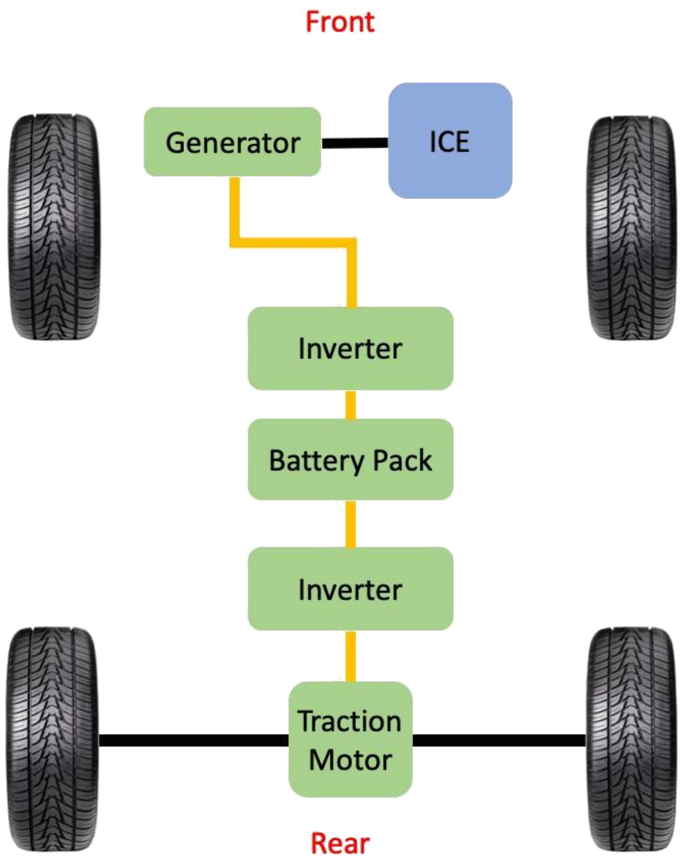

Figure 2. Series HEV Drivetrain

Parallel hybrid electric vehicles (Figure 3) do have a mechanical connection between the ICE and wheels. Typically, the ICE is connected to the wheels via an automatic transmission. An electric machine is also connected to the wheels somewhere along the drivetrain. Commonly, the electric machine is connected to the drivetrain after the transmission on the same drive axle as the ICE. However, the electric machine can also be on a different axle (known as a through-the-road hybrid) or in front of the ICE (commonly referred to as a belted alternator starter). In this configuration, both the ICE and electric machine can provide torque to the wheels at the same time. The vehicle can also operate as ICE only, electric only, or in a battery charge mode in which the electric machine charges the battery via regenerative braking or by absorbing torque from the ICE.

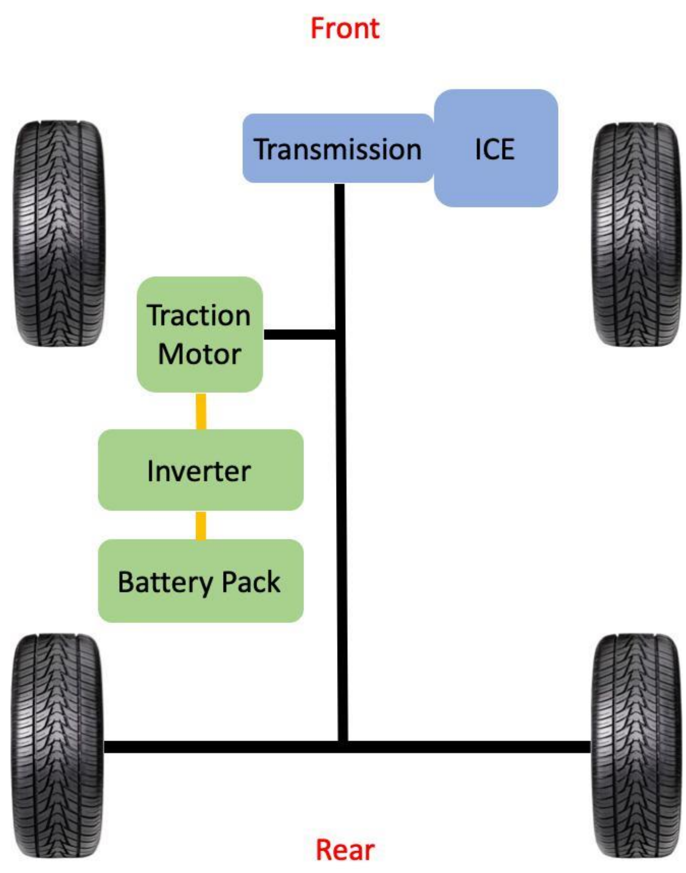

Figure 3. Parallel HEV Drivetrain

Parallel-Series HEVs (Figure 4) are essentially a combination of the two previously described architectures. In a parallel-series, the vehicle can operate as either a parallel or a series vehicle. This necessitates that two electric machines are used and that the drivetrain has a system of clutches that allow the ICE to be mechanically decoupled from the wheels. This architecture has the potential to be the most efficient, but it also introduces complexity in the mechanical drivetrain and overall control strategy.

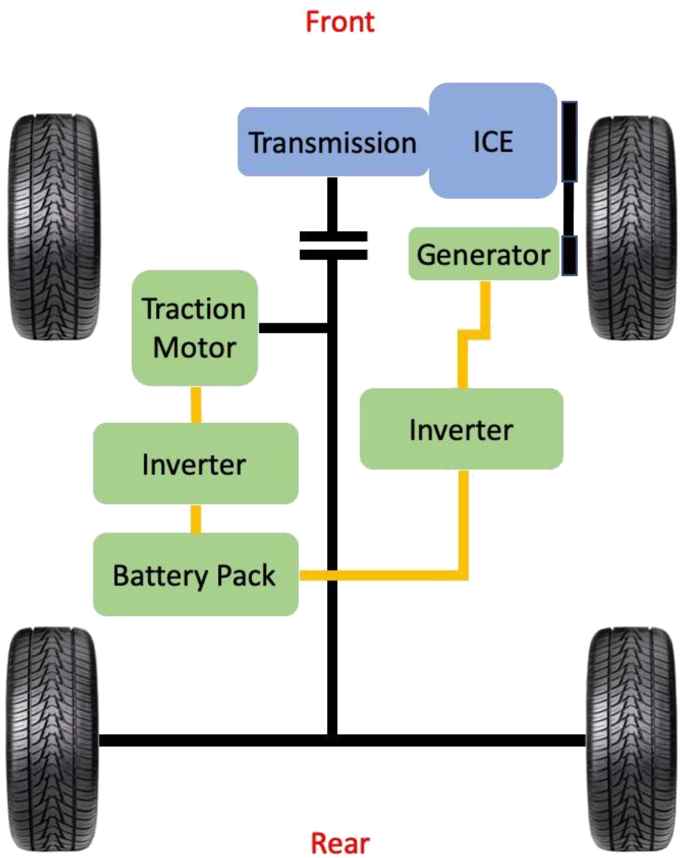

Figure 4. Series-Parallel HEV Drivetrain

1.2.2 Plug-in vs. Non-plug-in

HEVs can either be plug-in or non-plug-in. Plug-in hybrid electric vehicles have a user-accessible charging port that allows the HV battery pack to store electricity from the grid. Plug-in HEVs typically operate in a charge-deplete operation, which prioritizes the use of electrical energy since the battery can be charged when the vehicle is parked or overnight. Because of this, plug-in HEVs generally have a larger battery pack and a larger electric machine to allow for an increased electric-only range. During a charge-deplete operating mode, the battery SOC is allowed to decrease substantially. This occurs because the vehicle is either operating in an electric-only mode or making control decisions that favor battery usage in order to conserve fuel.

Non-plug-in HEVs do not have a charge port and the only refuelling that needs to be done is with gasoline, just as with a conventional vehicle. These vehicles typically operate in a charge-sustain mode, in which the state of charge (SOC) of the battery pack starts and ends at the same point over a drive cycle. In this mode, the battery acts as more of an energy buffer as opposed to an energy storage system, and thus can have a smaller energy storage capacity. The battery allows for energy to be stored when the ICE is producing excess power and allows for energy to be used when the ICE can operate more optimally at a lower torque level.

1.2.3 HEV Naming Conventions

When developing a parallel or parallel-series HEV, the positioning of the electric machine(s) alone the drivetrain is an important consideration due to packaging constraints and gearing that occurs between the electric machine and vehicle wheels. An electric machine is referred to as a P0 if it is before the ICE, which is the case with a belted alternator starter. A P1 electric machine is directly after the ICE before the clutch or torque converter. A P2 electric machine is also between the ICE and transmission, but after the clutch. A P3 electric machine is between the transmission and differential. A P4 electric machine is either after the differential or on a separate axle than the internal combustion ICE. The various positionings of electric machines along the drivetrain are shown in Figure 5.

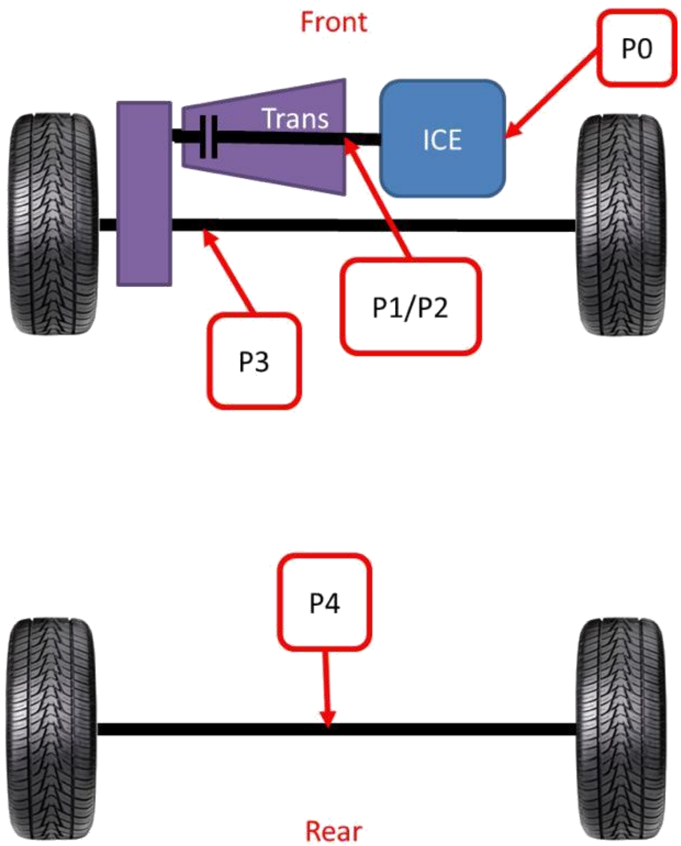

Figure 5. HEV naming conventions based on EM positioning

1.3 Hybrid Vehicles in Industry

In 2018, only 2.5% of light vehicle sales were HEVs while 2.1% were BEVs [2]. The market share of electric vehicles (including HEVs) was valued at $119 billion in 2017 but is expected to grow to $567 billion by 2025 [2]. Some of the leading causes of the growth in market share include government initiatives, advancements in technology, government regulations, and increased demand for fuel efficient/low emission vehicles [3]. While HEVs are generally viewed as fuel efficient vehicles capable of achieving higher fuel economy than their conventional counterparts, some automakers have given up on the development of HEVs in favor of investing more in BEVs, which they see as the ultimate solution to the increased government regulations regarding emissions and increased consumer demand for more efficient vehicles. Both General Motors and Volkswagen have announced that they will no longer develop hybrid vehicles and will instead focus on fully electric vehicles [4].

CHAPTER 2. DESIGN OF A HYBRID SUV FOR MOBILITY-AS-A-SERVICE

2.1 Mobility as a service and Georgia Tech EcoCAR's Target Market

An important aspect of the EcoCAR Mobility Challenge competition is to design the vehicle for a Mobility-as-a-Service (MaaS) market. MaaS was predecessed by Mobility Management, which was investigated by the US Department of Transportation as early as 1990 [5]. This initiative looked at connecting consumers desiring transportation to be provided with various alternatives to get to their destination. The transportation provider would not only provide information on various services that would satisfy the needs of the consumer, but also ideally provide a place for the consumer's transaction to the service provider. MaaS has grown out of this early definition and has been spurred by advancements in technology that allow for services like on-demand ride hailing such as Uber and Lyft, car sharing apps such as Turo and ZipCar, and even micro-mobility solutions such as electric scooters and bikes. The MaaS Alliance defines MaaS as 'the integration of various forms of transport services into a single mobility service accessible on demand' [6]. The various forms of transportation services may include car sharing, ride-hailing, ride-sharing, public transportation usage (bus, train, etc.), and micro-mobility options. With each of these options, the consumer will ideally be able to access them at any given time from any location.

This MaaS model of transportation is vastly different than historical modes of transportation, especially in the United States where 95% of households own at least one car [7]. The adoption of MaaS as a solution to all transportation needs will mark a monumental marketplace shift in the transportation industry as consumers move away from car ownership and leasing. In order to satisfy the demands of the consumers and marketplace, auto manufacturers will have to design their vehicles differently such that they can be used in MaaS applications. This could include a variety of factors such as increased durability, allowing multiple users to unlock and operate the vehicle, and the ability to be in service for long periods of time (ideally non-stop), which is especially important for vehicles that utilize electrified powertrains that rely on grid charging. As part of the MaaS industry, the car sharing sector is expected to be a $12 billion market by 2024

[8] while the ride-sharing market is expected to reach $148.7 billion by 2024 [9]. A breakdown of the various MaaS models for vehicle applications can be seen in Table 1 Vehicles can either belong to a fleet owned by a fleet manager or to an individual consumer. When the vehicle is driven, it can be driven by the end-customer, or the end-customer can ride in the vehicle, such as in an Uber of Lyft.

Table 1. MaaS vehicle ownership and use models

MaaS Models	Fleet owned	Privately owned
Customer Drives	Carsharing: Maven, Car2Go, Zipcar, Lyft Rentals	Person to person car sharing: Turo, Getaround, Maven
Customer Rides	Traditional taxi/limo service	Ridesharing/ridehailing: Uber, Lyft

The Georgia Tech EcoCAR vehicle is specifically targeted towards ride-hailing drivers, which introduces some special considerations which were taken into account when designing the HEV architecture. In order to define the needs of the team's customer, Lyft drivers were interviewed at a Lyft hub in Atlanta. Specifications of popular vehicles used for ride-hailing were also analyzed to ensure the specifications of the vehicle are competitive in the marketplace. One of the most important vehicle technical specifications (VTS) set by the team was fuel economy of 34.5 mpg. This is below the weighted average of the six most popular vehicles used for ride-sharing, but the average is skewed by the dominance of the Toyota Prius amongst ride-hailing drivers and its average fuel economy of 50.82 mpg. Fuel economy was an important consideration because the main motivation of most ride-hailing drivers is profit, which can be increased if fuel costs are decreased. Employing a non-plugin HEV to achieve a higher fuel economy allows for continual use of the vehicle (which only needs to be refueled with gasoline). Additionally, the SUV body style was seen as desirable by most ride-hailing drivers because certain vehicles (mostly SUVs) are seen as more luxurious and the drivers would be able to use it for the premium service levels offered by ride-hailing services like Uber and Lyft, further increasing the ride-hailing driver's profits.

CHAPTER 3. MODELING AND SIMULATION FOR ARCHITECTURE SELECTION

In order to choose a HEV architecture that was suitable for the chosen target market and would perform well in competition events, a Simulink vehicle model was used to evaluate performance metrics on a variety of hybrid vehicle architectures with various component selections.

3.1 Introduction of Model

The model used for architecture selection is a forward looking Simulink model that was developed by MathWorks and donated to EcoCAR teams for use in the competition. The model was fully functional when donated, but validation of the model, inputting team-specific components and parameters, and developing a control strategy was left to the teams.

The front page of the donated model can be seen in Figure 6, which offers several selectable options to alter how the model works based on what the team wants to test. This was especially useful for the architecture selection process because it allowed different drivetrains, EMs, and ICEs to be tested simply by selecting the components before running the model. The model offers the option to change which EMs and battery are used (boxed in red), which ICE and drivetrain type (boxed in blue), and for the drive cycle or other prescribed speed trace to be changed (boxed in orange).

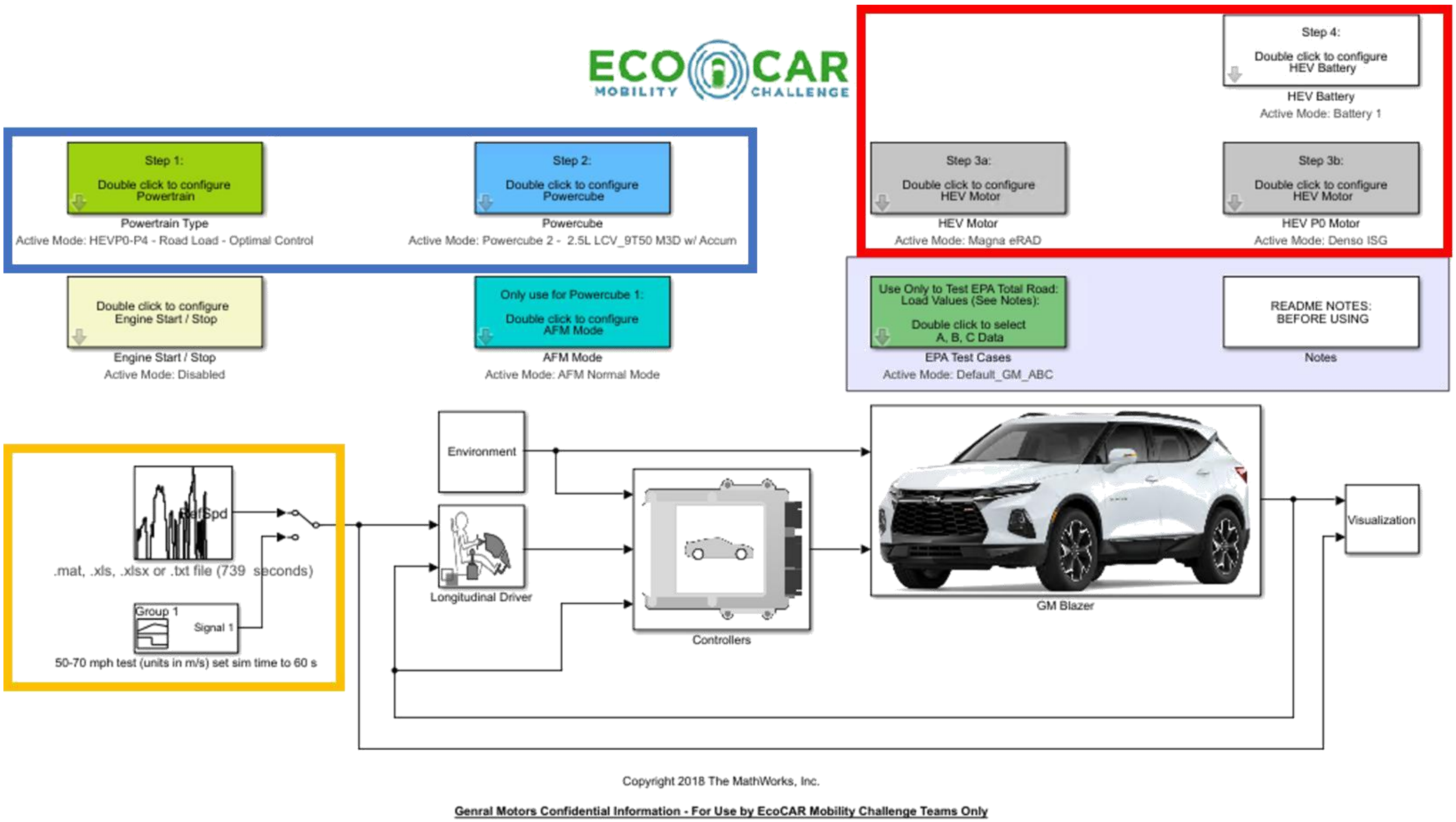

Figure 6. Front page of vehicle model with configuration block

The input to the model is a user-selected drive cycle, which contains the desired vehicle speed for every 0.1 seconds. For most simulations, a predefined drive cycle was used to compare the model results with what was obtained by the EPA. The EcoCAR competition also generated a city and highway drive cycle, EMC City and EMC Highway, by combining preexisting drive cycles. Additionally, step or ramp inputs can be used in the model, which can model 0-60mph, 50-70mph, and 60-0 times.

3.1.1 Predictive Driver Block

The target speed as prescribed by the drive cycle is sent to a predictive driver model (Figure 7), which is a Simulink block that determines the required torque to maintain the drive cycle speed. This is meant to simulate an actual driver and utilizes a look ahead distance so that the 'driver' can prepare for changes in vehicle speed. The driver block has two inputs: the vehicle's reference speed, which is obtained from the drive cycle, and a feedback of the vehicle's modeled speed, which comes from the output of the model. The model then uses the vehicle's mass, total tractive effort, and resistive coast-down coefficients to compute an accelerator pedal percentage that will maintain the desired vehicle speed.

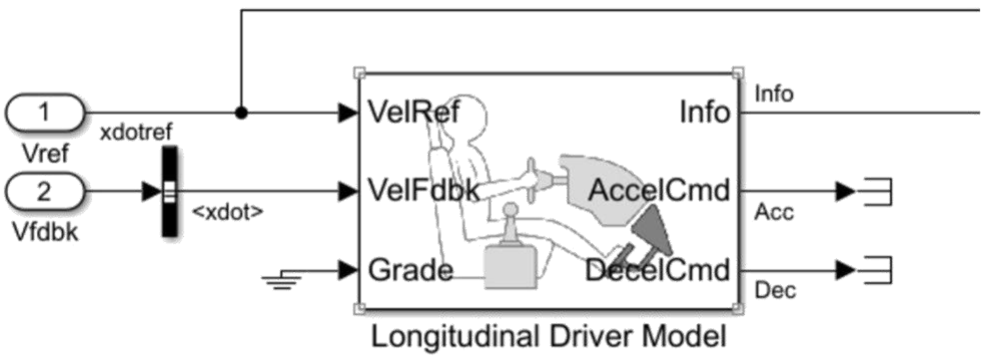

Figure 7. Predictive driver block

3.1.2 Controller Blocks

The output of the predictive driver goes directly to the model's controller block, which contains controls for the ICE, transmission, and hybrid propulsion system. The ICE is controlled using the MathWorks Spark-ignited engine control block with parameters that were obtained from GM. The transmission controller is a state machine that uses vehicle speed and pedal position to determine gear shifts based on a shift map donated by GM.

The controller block for the hybrid propulsion system is selectable based on the drivetrain architecture chosen from the model front page. An overview of the hybrid control system is shown in Figure 8. The inputs to this block are shown on the left and the outputs are shown on the right. The main outputs of the HCM block are a torque request to the ICE, P0 EM, and P4 EM. The majority of the control computation takes place in the energy management block, which computes the torque split between the ICE and electric machines. The computation within this block will be discussed in more detail later.

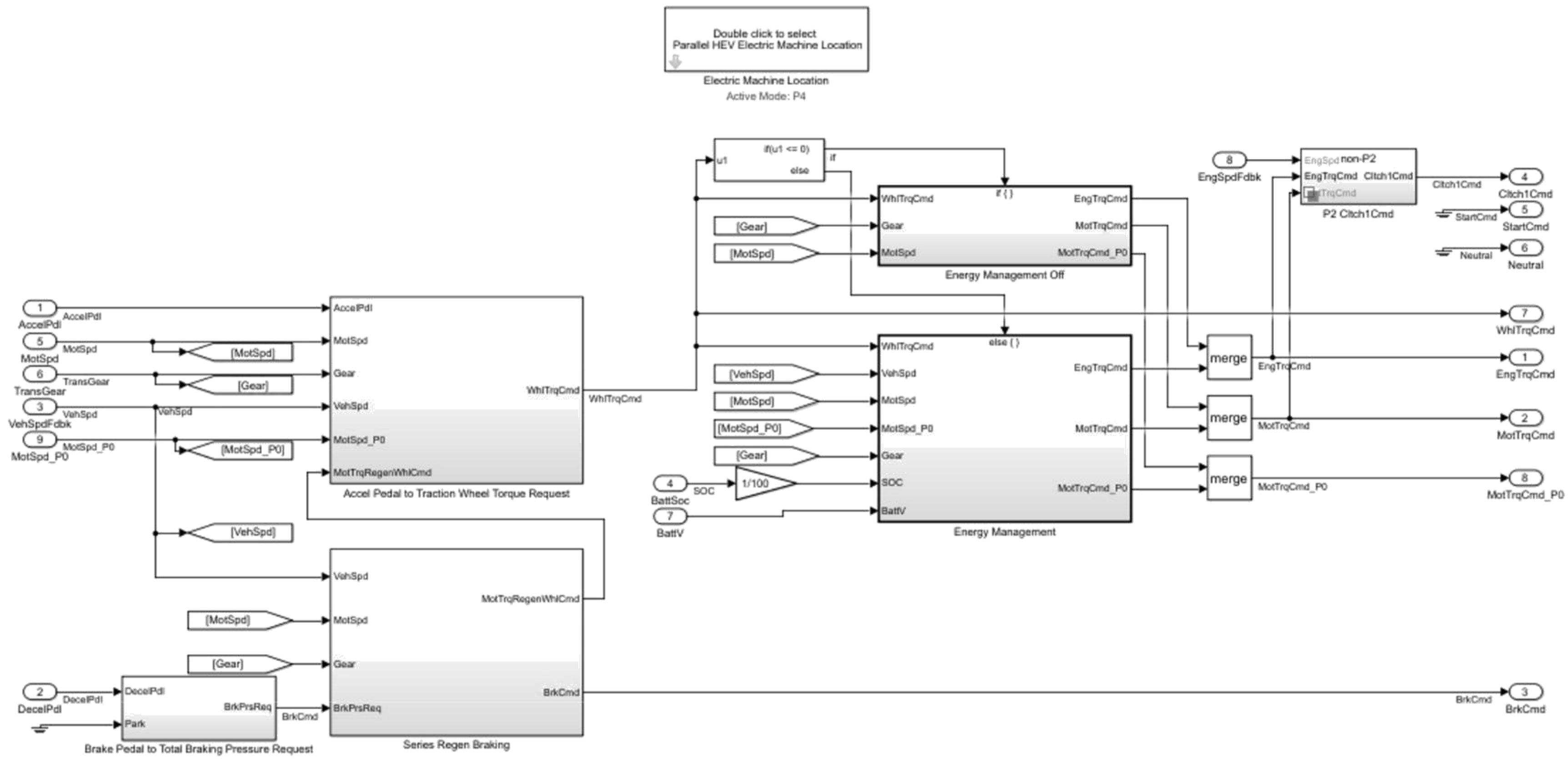

Figure 8. Hybrid Control Module in Simulink Model

3.1.3 Blazer Model

The Blazer model consists of the MathWorks Spark-ignited Mapped Engine block, an electric plant containing all of the HV components of the drivetrain, and a drivetrain block that incorporates the physics of the moving vehicle into the model.

The electric plant consists of the HV battery, two electric EMs, and a parasitic draw block, which allows the LV system to draw from the HV battery to account for accessory loads like the radio, headlights, etc. The HV battery is modeled using a MathWorks Lithium-Ion Battery Pack block, which uses parameters from the GM HEV4 battery pack. Similarly, the EMs are modeled using a MathWorks Mapped Motor block, which uses a torque speed envelope and tabulated efficiency or loss data provided by the EM supplier. The electric plant does not account for fluctuations in battery temperature and instead a constant ambient temperature is assumed.

The drivetrain block, shown in Figure 9, models the tractive effort of the propulsion system compared to the resistive forces encountered by the vehicle. The torque of the P0 EM is added to the torque of the ICE pre-transmission, as shown boxed in red. The gain added to the P0 torque accounts for the gear ratio between the P0 EM pulley and the ICE crankshaft pulley. The P4 EM is modeled as a differential with the EM torque being added to the differential as a driveshaft torque, shown boxed in blue. This allows for the gear ratio between the P4 EM and rear axles to be set as the differential gear ratio.

The dynamics of the model are based on the Vehicle Body Total Road Load Block [10], which uses A, B, and C road load coefficients. These coefficients were measured during vehicle testing performed by General Motors and represent the resistive force of the road according to

!"#$ = # + %&+ (& +)* sin(/), (1)

%

where / is the road grade. The modeled motion of the vehicle is determined from

!&"&#' =)&+ !!"#$' (2)

where !&"&#' is the sum of all forces acting on the vehicle, including ICE, EM, and braking forces.

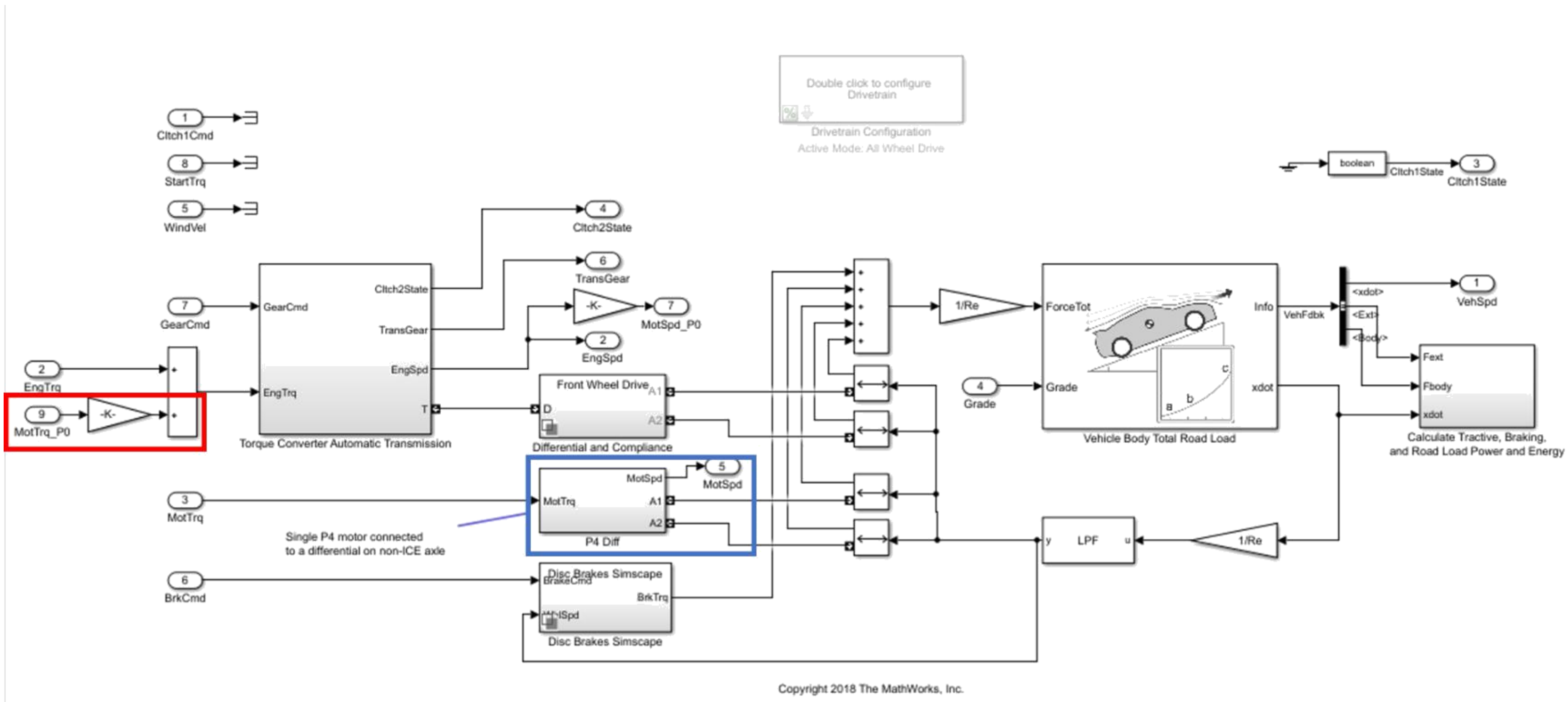

Figure 9. Simulink model for P0P4 drivetrain with the addition of the P0 torque boxed in red and the P4 torque boxed in blue

The main outputs of the model are vehicle speed, battery SOC, and fuel consumption. The vehicle speed is necessary to compare to the drive cycle and ensure that the vehicle speed is following the drive cycle adequately. It is also used for feedback to the predictive driver block. The battery SOC is monitored to ensure that the vehicle is operating in a charge-sustaining drive mode and that the battery is staying within the limits set by the vehicle controller. Finally, fuel consumption is tracked because the main goal of the competition is to minimize fuel consumption. Additionally, architecture, component, and controller changes all influence fuel economy, so the decision process in Year 1 of the competition was largely driven by the fuel economy output of the model.

3.2 Supervisory Control Strategies

The development of a hybrid vehicle has added complexity over a conventional vehicle because a supervisory control strategy is required to efficiently convert the driver torque request (through an accelerator pedal) into a torque request to the ICE and one or more electric machines. In a conventional vehicle, this was done historically through a mechanical cable that directly connected the accelerator pedal to the throttle body of the ICE. The throttle plate of the ICE is opened further as the accelerator pedal is pressed further towards floor of the vehicle, allowing more air to enter the ICE. The engine control module (ECM) responds to the increase in air flow by increasing fuel flow to the ICE, allowing it to produce more torque. Most modern vehicles now employ an electronic throttle control system, which converts the accelerator pedal position to a Controller Area Network (CAN) signal, which is then sent to the throttle body valve via electrical signal wires. The throttle body control module interprets this CAN command and actuates the throttle plate accordingly. This allows for the ECM to adjust the actual torque request to the ICE based on drive mode, vehicle speed, and other parameters that allow for more efficient operation of the ICE or better driving dynamics.

In a hybrid vehicle, the torque request from the driver does not correlate directly to a torque request to the ICE. Instead, a control strategy will be used to request torque from the ICE such that the ICE is operating at an optimal fuel consumption point. If this torque is lower than the requested torque by the driver, the EMs will supply the deficit to ensure the driver request is satisfied. Alternatively, if the torque is greater than the requested torque by the driver, the EMs will be used to absorb the excess torque and store the excess energy in the battery pack. Two possible control strategies, rule based control and equivalent consumption minimization strategy (ECMS) are discussed below.

Figure 10 illustrates the additional complexity of modern and hybrid vehicles over historical vehicles. The black line in the top row represents the mechanical linkage between the accelerator pedal and throttle body on historical vehicles. In modern vehicles, this mechanical linkage is replaced by electrical signals (depicted by the green lines) that allow the control module to adjust the driver's accelerator pedal input based on a variety of factors. Hybrid vehicles add another layer of complexity by adding an additional torque source. This requires the control module to split the determined torque request between the ICE and electric machine in the most efficient manner possible.

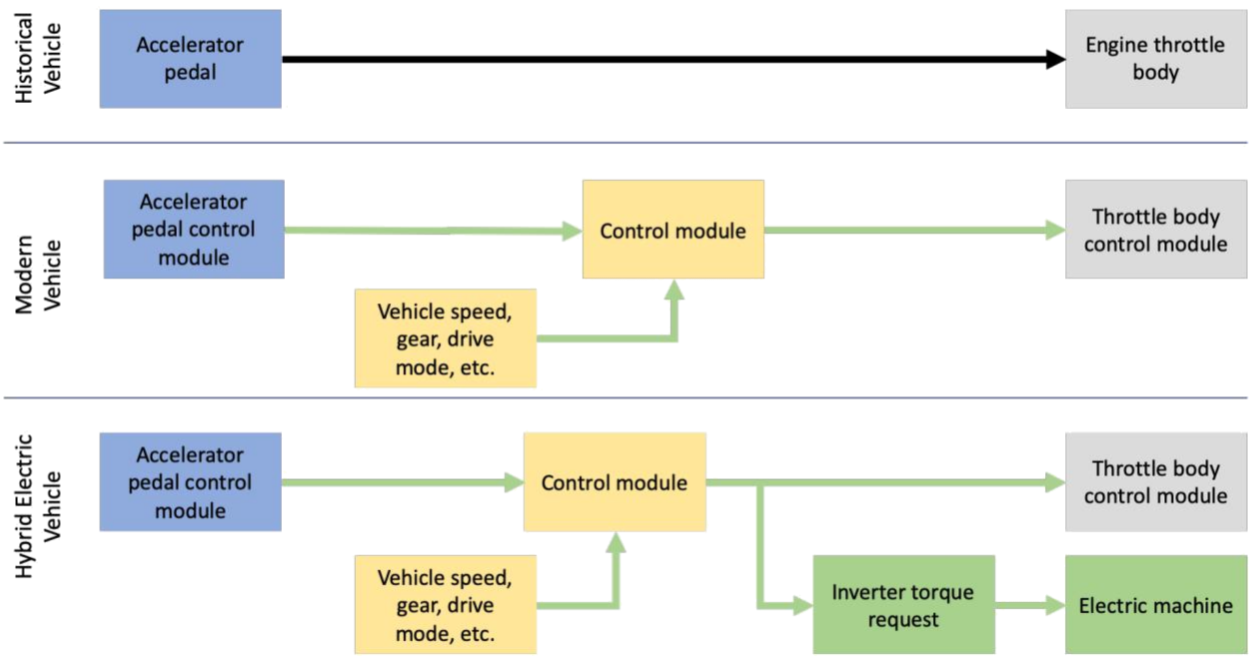

Figure 10. Translating accelerator pedal position to torque request in historical, modern, and hybrid vehicles

3.2.1 Rule Based Control Strategy

A rule based control strategy is one in which a predefined set of rules are used to determine the control values for the ICE and electric machine(s). These rules are derived from models and actual test driving. The data collected is then analyzed to determine which operating modes produced the best fuel economy for a variety of vehicle states. For example, in a plug-in HEV, one such rule may be that when the battery SOC is between 30-100%, the ICE is not used and the vehicle is operated in an electric-only mode. When the SOC drops below 30%, additional rules may be followed that encourage a charge-sustaining operation to maintain the battery SOC until it can be charged from the grid.

An advantage of this control strategy is that it can be very simple and easy to implement. However, because the rules are derived from modeling and typically a low number of actual vehicle test miles, the fuel economy will be lower than what the vehicle would be capable with if using an optimal control strategy.

3.2.2 Equivalent Consumption Minimization Strategy

Equivalent Consumption Minimization Strategy (ECMS) [11] is a control strategy used for charge sustaining HEVs that operates by equating any battery usage to a fuel consumption. This operating method works well for charge sustaining vehicles because the only energy source added to the vehicle is fuel (not electric power as is the case for plug-in HEVs).

Since the vehicle is charge sustaining, the battery SOC must not fluctuate beyond limits set by the controller. Any battery usage must be penalized with an equivalent fuel consumption because at some later time step in the drive cycle, the ICE must be used to restore the electrical energy that was used. Alternatively, battery charging is incentivized because at some later time step in the drive cycle, the battery can be used in place of fuel consumption.

This control strategy works by using a cost function that sums the fuel power used by the ICE, the equivalent cost of the battery power used, and penalty costs arising from control choices that push the battery SOC outside of the predefined limits or are infeasible based on current operating conditions. The cost function is represented in equation 3:

! = $!"#$ + & ∗ $%&'' ∗ ((*+,) + ((./0&1213145) (3)

In this equation, $!"#$ represents the power associated with the fuel used by the ICE for a given control choice. This is added to the equivalent fuel consumption of battery usage, which is derived by multiplying the battery power used ($%&'') by an equivalence factor, s. The cost function also include two penalty factors, which will increase the cost so as to make it a poor control choice. The penalties will be applied if the SOC of the battery is close to or outside of the pre-defined allowable range and if the torque request from the ICE or electric machine(s) is beyond what they are capable of.

The equivalence factor, s, can either be a constant value or it can change based on the battery SOC in what is known as adaptive ECMS (a-ecms). If s is a constant value, it must be chosen such that the net change in battery SOC over a drive cycle is minimized, which is required for charge-sustaining operation. If the s value is set too low, battery usage will be ‘cheaper’ than fuel use, and the battery will quickly be depleted until it reaches the low SOC limit. Alternatively, if s is set too high, battery usage will be more ‘expensive’ and the control decision will favor ICE use and battery charging. In a-ECMS, the equivalence factor can change based on the battery SOC using a PID controller. This allows for battery usage to become more favorable when the SOC is high and it favors ICE use and battery charging when the battery SOC is low. Figure 11 shows how the equivalence factor (displayed in blue) changes in response to changes in the battery SOC (displayed in orange). The adjustments made to the equivalence factor over the course of the drive cycle help to ensure that the vehicle maintains a charge-sustaining operation.

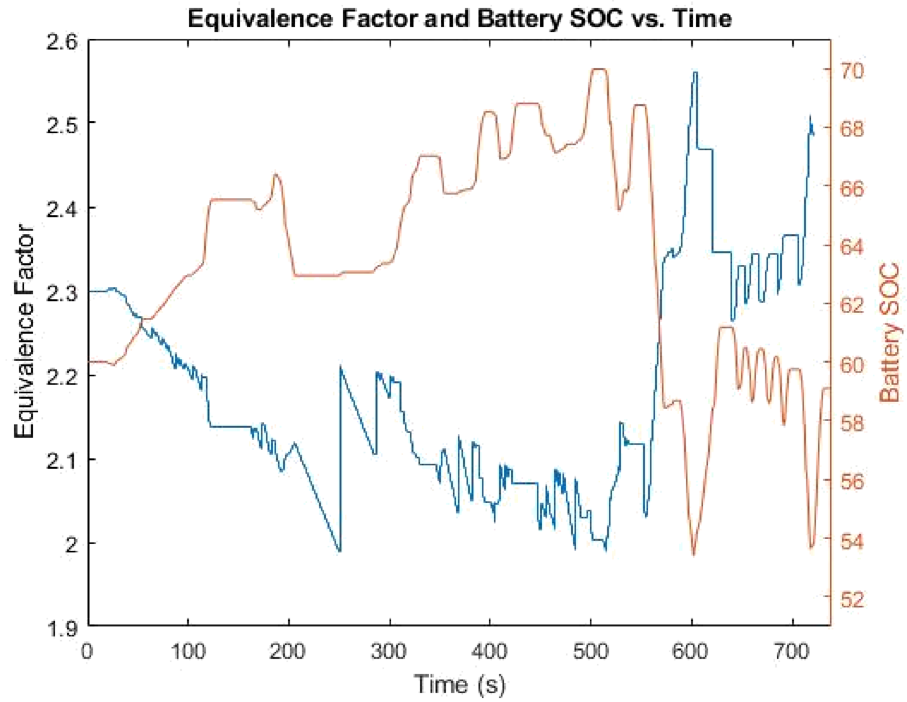

Figure 11. a-ECMS equivalence factor and battery SOC over a drive cycle

3.2.3 Implementation of a-ECMS in Simulink vehicle Model

To choose a vehicle architecture as part of the EcoCAR Mobility Challenge, an adaptive ECMS control strategy was implemented in the Simulink vehicle model to allow for a variety of HEV configurations and components to be tested. The above equation can be easily implemented for a single EM HEV architecture, but dual EM HEV configurations were also being considered to better satisfy the needs of the consumer target market. The cost function remains the same for a dual EM HEV, but the number of available control options has increased by a power of two since there are now two electric machines that torque can be requested from.

Within the energy management controller block (Figure 12) are three separate blocks that make up the steps required to compute the optimal torque split based on the principles of ECMS.

The Control Domain block generates a list of all available P4 EM torque values. These torque values are evenly spaced valued between the negative maximum torque and maximum torque that the P4 EM can produce. At this point, the EM speed is not considered, meaning there are some torque options that are not feasible. These will be addressed later when feasibility penalties are applied. For each one of the P4 torque values, a similar procedure is done for the P0 to generate all possible torque values that can be requested from the P0. In a single EM model, the control values are limited to n, the number of P4 torque values. In this dual EM model, however, the number of control values becomes n^2 because the P0 torque values must also be considered. In order to keep the number of control options reasonable, the P0 and P4 EM torques can be discretized to only allow a pre-defined number of available torque command values. This decreases the overall efficiency of the vehicle, but increases the model run time. The output of the control domain block is two vectors of possible P0 and P4 torque values. This differs from the single EM version of ECMS because only one vector of possible EM torques will be generated, reducing the number of possible control values.

In the Powertrain Constraints block, the net EM torque is computed by adding the torque of the P4 and P0 EMs for each control option. The net EM torque command for each control option is then subtracted from the driver requested wheel torque to arrive at the necessary torque command to the ICE. For each of these control options, the fuel consumption of the ICE and battery usage is determined and eventually feed into the cost function. For each control option, feasibility checks are performed to ensure that at the current vehicle speed, the EMs and ICE are capable of the torque request. If a control option is found to be infeasible, a penalty is applied to the overall ECMS cost equation that decreases the favorability of that torque combination. The battery limits are also factored into the cost equation using infeasibility penalties. If the battery current exceeds the limits of the battery or if a control choice puts the battery SOC outside of the predefined limits, a penalty will be applied.

In the final block, the Hamiltonian is computed for all possible control options and the options that yield the minimum cost are chosen as the most efficient operating points for the P0 EM, P4 EM, and ICE. The power used by the ICE is computed by using the ICE fuel rate, which is based on the ICE speed and torque command. The fuel rate is then multiplied by the lower heating value of E10 gasoline to arrive at the power of fuel used, in kW. The power used by the battery pack is determined by multiplying the HV bus voltage and current draw. This electric power is multiplied by the s factor, which varies based on the battery SOC. The three outputs of the energy management controller are torque commands to the P0 EM, P4 EM, and ICE.

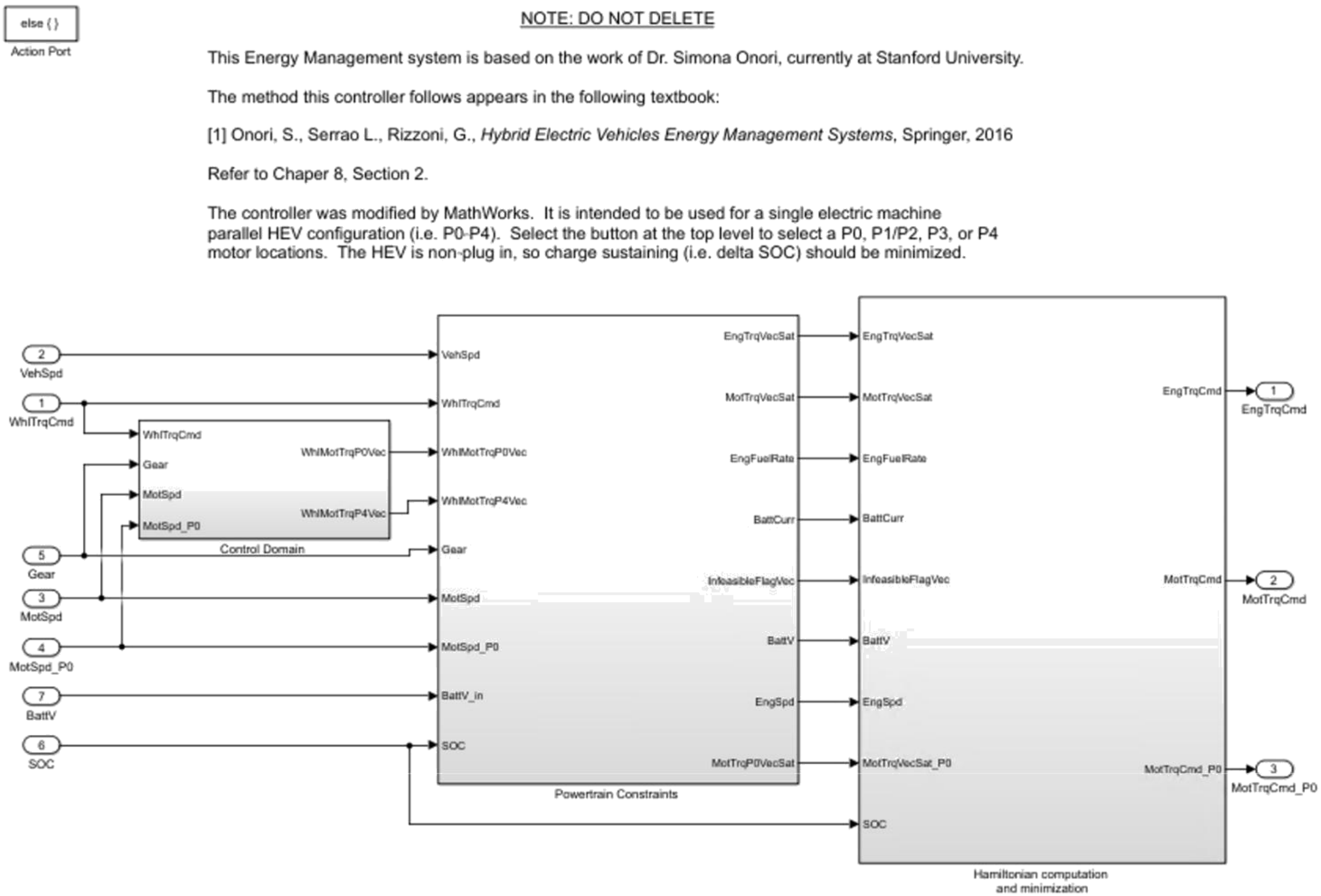

Figure 12. Energy management controller block, originally developed by MathWorks with modifications to allow for control of two electric machine

3.3 Simulation Findings

The majority of HEV architectures that were tested in simulation featured either a P4 or P0P4 hybrid drivetrain and a variety of different electric machines, ICEs, and HV battery packs. However, due to packaging constraints, two potential P4 EMs were considered for final implementation in the vehicle, both of which were designed as an e-axle with integrated gearing. The first EM was developed by Magna Powertrain and is capable of 50kW of peak power with a 9.17:1 gear ratio. The second EM was developed by American Axle and Manufacturing and features 52 kW of peak power with an 11.2:1 gear ratio. For architectures that included a P0 EM, the Denso Integrated Starter Generator (ISG) was chosen due to it being a sponsored donated component and because previous EcoCAR teams had successfully integrated it in past competitions. A team-developed battery pack was outside the scope of the competition, so the HV battery options included the 300 V, 1.5 KWh HEV4 battery pack out of the Chevrolet Malibu Hybrid and a larger 346 V, 5.4 KWh custom battery pack that was commissioned by some of the competing EcoCAR teams. The team was offered 3 powercubes (ICE and transmission pairs) from GM that could be integrated into the vehicle and would receive support from GM. Simulations with all three ICEs were performed, but the 2.5 L naturally aspirated LCV ICE was favored due to it being offered on the base trim level Blazer and thus would reduce the amount of resources and time needed to install.

The simulation results for the two preferred P0P4 architectures, as well as P4 architectures featuring the same P4 EMs are displayed in Table 2. Due to a lack of refinement in the a-ECMS controller for the P0P4 architecture, the fuel economy for the

P0P4 and P4 Magna architectures differed by 0.3% while the AAM architectures differed by only 1.5%. Based on the Simulink results alone, the increased complexity of a P0P4 architecture does not increase the vehicle's modeled fuel economy substantially, and actually decreases the modeled fuel economy for the AAM architecture. The reasoning behind the poor performance of the P0P4 architectures compared to the P4 only architectures was difficult to determine. It was suggested by MathWorks that the increased increments between EM torque values in the P0P4 model would decrease fuel economy, but testing with the same increments as the P4 model proved that this was not the case. After the P0P4 ECMS was implemented by the Georgia Tech team, MathWorks released a very similar implementation because several of the other EcoCAR teams were investigating P0P4 architectures. Similarly, the results of their P0P4 model were roughly the same or worse than the analogous P4 architectures.

Table 2. Simulation results for 4 preferred vehicle architectures

Architecture	EMC City (mpg)	EMC Hwy (mpg)	EMC Combined (mpg)
P0P4, GM LCV, AAM EDU2, Denso ISG	33.3	31.7	32.5
P0P4, GM LCV, Magna eRAD, Denso ISG	33.5	31.7	32.7
P4, GM LCV, AAM EDU2	32.3	31.7	32.0
P4, GM LCV, Magna eRAD	33.9	31.6	32.8

3.3.1 Considerations for a MaaS Vehicle

The decision to choose an architecture with a P0 EM was influenced by simulation results and by the demands of the target consumer (ride-hailing drivers). The P0 EM offers the following features that make it advantageous for a MaaS vehicle:

1. Stationary charging: The vehicle's HV battery can be charged while the vehicle is stopped (at a light, waiting to pick up the next fare, etc.).
2. ESS charging: the P0 can function as a conventional alternator by charging the HV battery pack during normal driving operation. This stored energy can be converted to 12V with a DC/DC converter, eliminating the need for an alternator.
3. Flying start: If the vehicle is also equipped with a P4 EM, the P4 can provide torque upon an initial driver torque request. The P0 can then be use to start the ICE if certain conditions are met, such as exceeding a set speed or if the battery SOC drops below a pre-set threshold.

Ultimately, a P0P4 architecture was chosen for three reasons: it offered an increase in fuel economy over the analogous P4 architecture when modeled using Dynamic Programming, it allows for several operating modes that are beneficial for MaaS applications, and it provided an educational challenge for the EcoCAR team.

3.4 Model Validation

The Simulink model was first validated by comparing the speed trace of the modeled vehicle to the prescribed drive cycle. This was done to ensure that the predictive driver block was operating correctly and that the fuel economy results could be compared to EPA results, which are obtained by a driver closely following the prescribed drive cycle. Next, the results of the model were validated by comparing the EPA published results for the V6 front wheel drive (FWD) variant of the Blazer to the results obtained from the model for the same variant.

When comparing the modeled vehicle speed to the drive cycle, trace misses were analyzed, which were areas where the modeled vehicle's speed differed from the prescribed speed from the drive cycle. There were no drive cycle trace misses of more than 2 mph for more than 2 seconds. This ensures that the drive cycle is followed adequately by the predictive driver and longitudinal dynamics of the plant model itself. The drive cycle trace, as well as the difference between the prescribed drive cycle and modeled vehicle speed, is shown in Figure 13. It can be seen that the drive trace misses are never more than 2 mph.

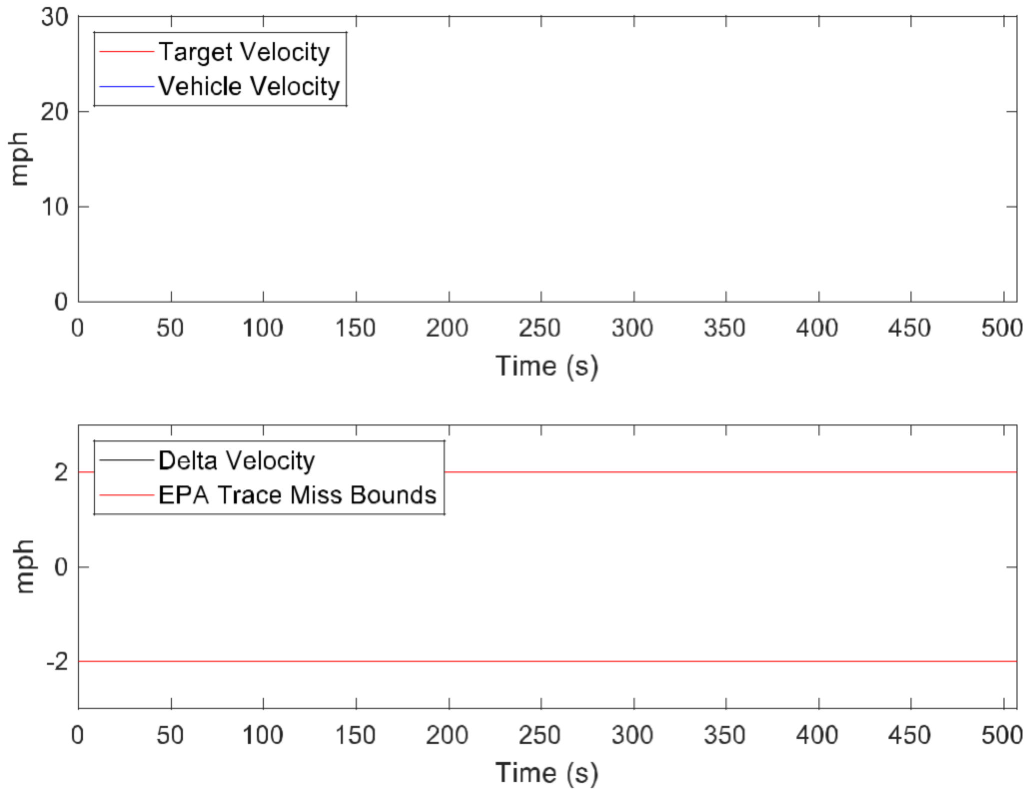

Figure 13. Drive cycle trace misses, UDDS Phase 1

The Simulink vehicle model was validated by inputting the stock V6 FWD Blazer parameters into the model and comparing the results to EPA published results for three drive cycles: HWFET, UDDS phase 2, UDDS phase 3. The HWFET cycle represents highway driving while the UDDS cycles represent urban driving. UDDS phase 1 was not used because it is tested by the EPA from a cold start, which the model is not able to replicate since thermal effects of the ICE warming up are not reflected in the model. The model showed good agreement with the HWFET and UDDS Phase 3 cycle. However, the model showed a 9.9% difference from the UDDS phase 2 cycle. One possible reason for this discrepancy is that during EPA testing, the ICE may still be warming up during phase 2 because it starts immediately after Phase 1, which is only 505 seconds long. In actual

EPA testing, if the ICE is still warming up at 505 seconds, the fuel economy would be worse than modeled fuel economy at 'hot' temperatures, which is what was observed.

Table 3. Model results compared to EPA data

Drive cycle	Modeled results (mpg)	EPA results (mpg)	% Difference
HWFET	36.52	37.1	-1.6
UDDS Phase 2	25.82	23.5	9.9
UDDS Phase 3	28.55	28.1	1.6

CHAPTER 4. ARCHITECTURE SELECTION

A considerable amount of effort was spent developing and validating the Simulink model so that it could be used for the architecture selection process, which included choosing the vehicle's hybrid drivetrain and which components would be used throughout the competition. Although fuel economy was a large driving factor in choosing the vehicle's architecture, other considerations, such as consumer acceptability, risk, and cost also had to be taken into account. A decision matrix was used to accomplish this, with the two highest weighted aspects being risk and fuel economy. In general, architectures with significant risks were avoided due to the team's desire of having a functional vehicle at competition. A functional vehicle that can compete in dynamic events would score 70% of the points in Year 2 dynamic events, with the remaining 30% coming from the vehicle's performance. Additionally, the CAVs portion of the competition becomes more important and carries more point values in later years of the competition. In order to score any points for the CAVs dynamic events, the vehicle must be driving, which further encouraged architectures with less potential risks. Fuel economy was deemed important due to the competition points associated with it and because of its impact on profits for ride hailing drivers.

4.1 Team Architecture: P0P4 Parallel-Series Through the Road Hybrid

The final architecture chosen was a P0P4 parallel through-the-road hybrid, seen in Figure 14. This architecture offers several possible operation modes, detailed below:

1. Hybrid propulsion – The ICE will supply torque to the front axle while the P4 EM will supply torque to the rear axle.

2. Regenerative braking – Negative torque can be requested from the P4 EM, which would charge the HV battery while slowing the vehicle down.
3. Stationary charging – while the vehicle is stopped and the transmission is in neutral, the P0 EM can absorb torque supplied by the ICE, which will charge the HV battery.
4. HV start-stop – The P0 EM can apply positive torque to the ICE crankshaft pulley, spinning the ICE up to a starting speed.
5. Series operation – While the transmission is in neutral, the P0 EM can absorb torque supplied by the ICE while the P4 EM can supply torque to the rear axle. This operation mode will be used minimally during low speed operations, if at all.
6. Electric only – While the transmission is in neutral, the P4 EM can supply torque to the rear axle to drive the vehicle.

The ICE used is the GM LCV engine, which is naturally aspirated with a displacement of 2.5 L. In addition to superior modeled performance, this ICE and its paired transmission is offered on the base trim level Blazer. GM ICE and transmission mounts, half shafts, and the OEM wiring harness could be used, which allowed resources to be used elsewhere.

The high voltage battery pack chosen is the HEV4 battery back from GM, which was originally used in the Chevrolet Malibu Hybrid. It offers a total energy capacity of 1.5 kWh and peak charge/discharge of 50 kW. In order to use the HV pack to power the car's LV systems, a DCDC converter is used that is also out of the Malibu Hybrid. It mounts to the HEV4 pack and receives commands from the hybrid supervisory controller. Both the HEV4 battery and DCDC converter are air-cooled using ducting and a blower donated by GM.

The P0 EM was donated by Denso and is known as an integrated starter generator (ISG) due to its ability to both act as a generator (similar to a conventional alternator) and as an ICE starter (as opposed to a toothed starter motor). The P0 EM has a peak power of 30 kW and a peak torque of 60 Nm. It attaches to the ICE crankshaft pulley with a micro-V belt. This EM is powered by a Cascadia (previously Rinehart) PM100DX inverter, which is located on the underside of the vehicle. The inverter was purchased by the team and was chosen because previous EcoCAR teams had successfully paired the Denso ISG and the PM100DX inverter in past competitions.

The P4 EM and inverter were donated by Magna Powertrain and were originally components used on a euro-spec Volvo V60 PHEV. This V60 featured a P0P4 architecture and the inverter has the ability to control both he P0 and P4 EMs. However, only the P4 side of the inverter will be used in this application. The EM, known as the eRAD, takes the place of a conventional differential in a rear wheel drive or all-wheel drive vehicle. It offers 50 kW of peak power and 200 Nm of peak torque. The eRAD features a 9.17 gear ratio and the outputs connect directly to half shafts that go to the rear wheel hubs. The inverter, which spans between the cargo area and underside of the vehicle, connects to the HSC via a CAN gateway, which allows the inverter to communicate as it would in the V60.

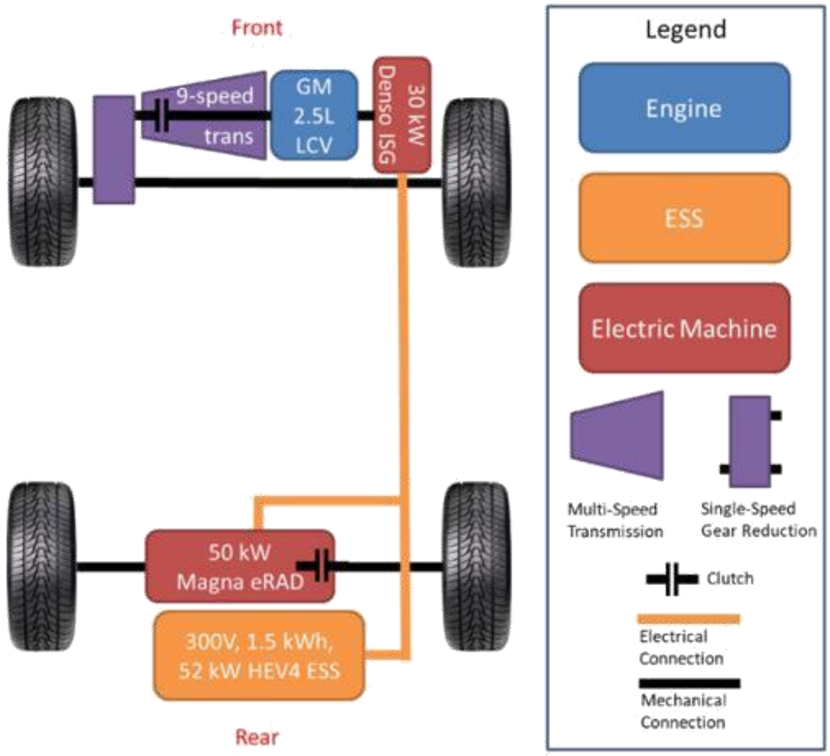

Figure 14. GT EcoCAR vehicle architecture with propulsion system components

CHAPTER 5. SUBSYSTEM DESIGN AND INTEGRATION

After the architecture selection process was complete and the team's preferred architecture was approved by the competition organizers, designs for all team-added subsystems had to be finalized before parts could be installed onto the vehicle. For the propulsion systems integration sub-team, these subsystems included the thermal system needed for the inverters and electric machines, low voltage electrical distribution and wiring, high voltage distribution and wiring, and all propulsion system mounts (electric machines, inverters, battery, etc.). A similar design process was followed by all team members designing structural mounts, and the design of the P0 EM mount is documented below.

5.1 P0 EM Mount Design and Integration

The P0 EM is a 30 kW electric machine that will replace the conventional alternator in the EcoCAR hybrid vehicle. The purpose of the P0 EM is to absorb excess ICE torque when the ICE is capable of a more efficient ICE operation. It can also be used in place of a conventional starter to start the ICE and can be used for stationary charging. The use of ICE start-stop and stationary charging were two important features for the consumer market since ride-hail drivers spend time idling waiting for fares and also spend time in stop-go traffic where start-stop would be beneficial.

The P0 attaches to the ICE with a belt that attaches the P0 pulley to the ICE crankshaft pulley. The stock LCV crankshaft pulley is designed for a 5 rib micro-V belt while the stock pulley on the P0 EM is designed for an 8 rib micro-V belt. To simplify the belt train, the belted water pump was replaced with an electric water pump, the belted AC compressor was replaced with a high voltage e-compressor, and the alternator was removed altogether, with its functionality replaced by the DC/DC converter. The removal of these components left the P0 EM and the ICE crankshaft pulley on the belt train, which reduces the overall complexity of it and allows for better control of the belt tension.

Belt tension was an area of concern whilst designing the for the integration of the P0 EM because while a conventional alternator only absorbs torque from the ICE, the P0 can also supply torque. This means that instead of there being one side of the belt that is always tight and one side that is always slack, as is typical, the functionality of the P0 EM will switch the slack and tight side of the belt. Since the original tensioning elements of the belt train were removed along with the other components, the mounting strategy for the P0 EM had to incorporate some kind of tensioning mechanism that would allow for the static tension of the belt to be adjusted. This would allow for easy removal and installation of the EM as well as adjustments in belt tension to reduce vibrational issues from the belt.

Because the P0 EM was attached directly to the ICE by the crankshaft pulley, the mounting location of the EM was limited. The ICE is mounted on vibration isolating mounts, which allow for a considerable amount of relative motion between the ICE and frame of the vehicle. Hence, the decision was made to mount the P0 to the ICE so that any relative motion between the ICE and EM would be eliminated. This further constrained the mounting strategy by requiring that only pre-existing holes in the ICE could be used for securing the mount.

Any team added components must adhere to any design guidelines specified in the non-year specific rules published by the competition organizers. The most relevant rule to this component were that all propulsion system mounts must be able to withstand a 20g lateral, 20g longitudinal, and 8g vertical inertial crash loading with a minimum factor of safety of 1.5.

5.1.1 P0 EM: Design Research

One of the reasons the P0 EM and inverter pair were chosen was that EcoCAR teams in the previous competition (EcoCAR3) were able to successfully implement it. Due to the collaborative nature of the competition, past deliverables and presentations from these teams were analyzed to provide insight on how to design the mount. Additionally, since the previous competition was also 4 years in length, several iterations of the design hinted at issues related to the P0 system that teams struggled with.

The most successful mounting strategy featured a turnbuckle as part of the mount itself to adjust the distance between crankshaft and P0 pulleys. Typically, turnbuckles are used in cable applications to adjust the tension of the cable or rope, such as on a sailboat or a fence. This application of the turnbuckle would use it in compression, but no issues were found with this.

5.1.2 P0 EM: Design Iterations using Topology Optimization

The design of the P0 EM mount was aided by the use of topology optimization, which identifies which areas of the mount material are required for the mount to withstand the subjected loading cases. The results of the optimization are generally organic shapes that would be difficult to manufacture, so the results must then be used to design a part that is manufacturable while still featuring the optimized structure.

For the P0 EM mount, a bounding box was created in CAD that included the entire volume that the mount could occupy. The bounding box also featured mounting holes where the final mount would attach to the ICE block. This bounding box was used for the first iteration of the optimization, which was performed in Altair Inspire. The results of the optimization show that for the top mount, only one mounting hole on the ICE was needed, which eliminated a significant amount of material. For the bottom mount, the results showed that material could be removed in several areas. Modifications were made to the original bounding box to reflect these changes and produce the first iteration of the final mount design. This design was then run through the optimization software again to further optimize it.

The first iteration of the optimization is seen in Figure 15. A concentrated mass was used for the P0 EM so that the inertial loads could be applied. The force acting on the P0 pulley from the belt was also applied, at the pulley location. The concentrated mass is attached to the mount using rigid elements, which assume that the P0 itself is completely rigid. The enclosed area that is shaded white is the original bounding box material that was deemed unnecessary by the optimization. Any volume that is shaded in gray was excluded from the design space, which meant that the optimization could not modify these areas. These areas are mostly bolt locations and the turnbuckle portion of the top mount. The volume that is shaded magenta is the result of the topology optimization and this had to be translated to a final mount that was able to be fabricated.

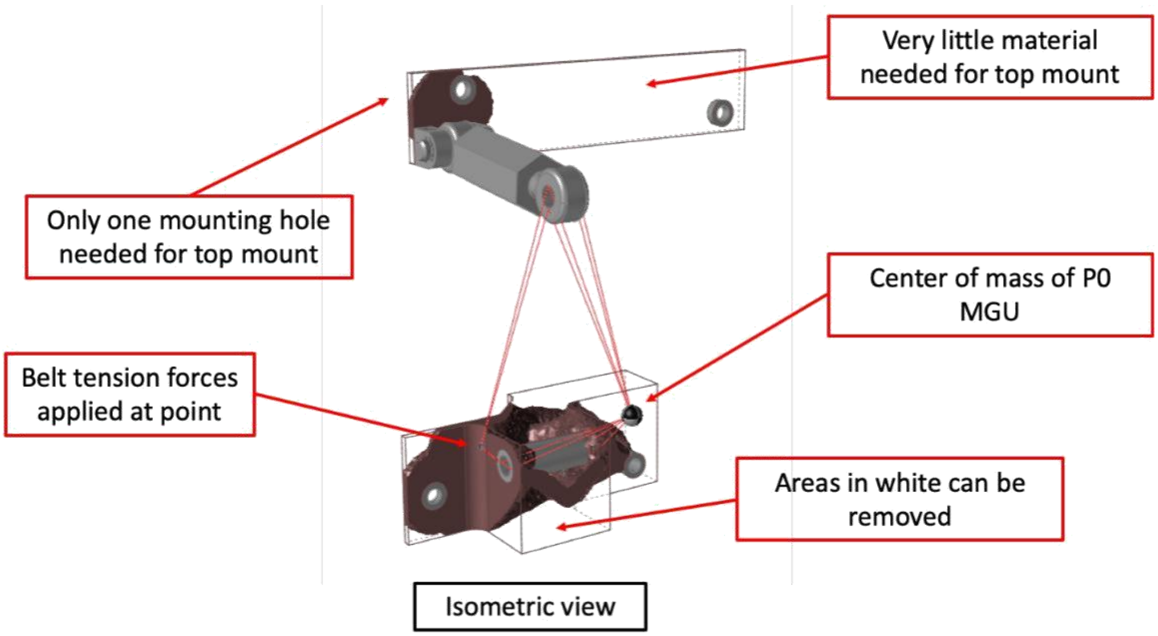

Figure 15. First iteration of topology optimization

Figure 16 shows the second iteration of the topology optimization, which featured a modified top mount using only one mounting hole and a refined bottom mount that took into account the results from the first iteration of optimization. Based on the results of the second iteration, more material could be removed from both the top and bottom mount. However, not all of the optimization results were translated directly to modifications in the mount. The mount had to maintain its ability to be fabricated and further reduction in the material volume of the mount would not yield significant weight savings.

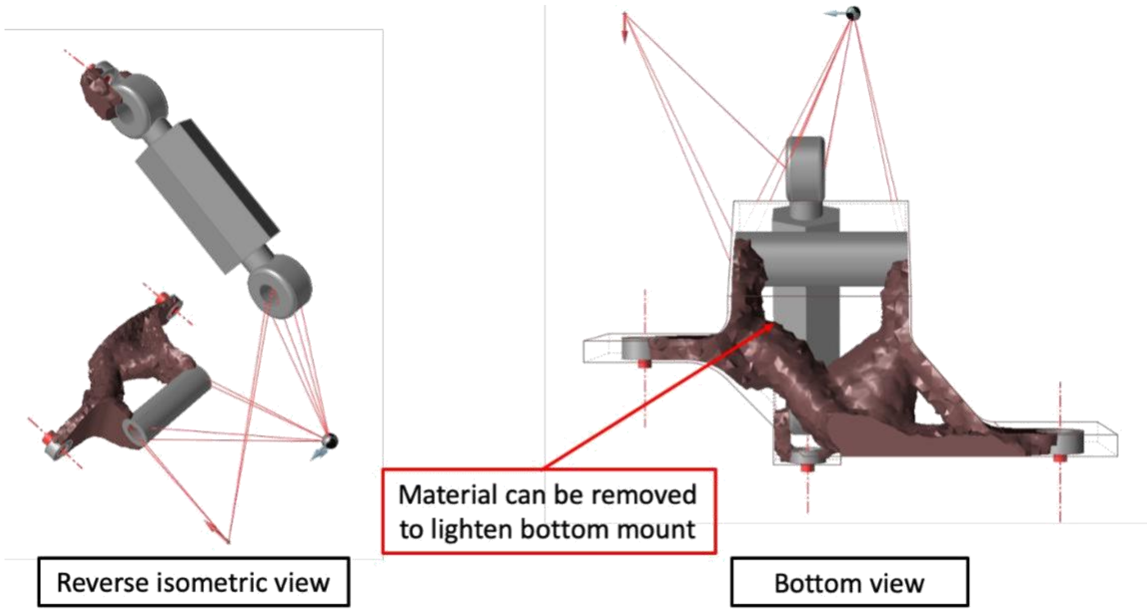

Figure 16. Second iteration of topology optimization

When transferring the results of the topology optimization to the mount CAD, the available fabrication methods were taken into account to ensure that the mount would be manufacturable using team resources. The chosen fabrication method used a waterjet for the top profile of the mount with finishing operations done using a manual mill.

5.1.3 P0 EM Mount: Analysis

When the final design was completed, it was analyzed using Altair HyperWorks to ensure that it was able to withstand the inertial loading requirements with a minimum factor of safety of 1.5. The model set-up can be seen in Figure 17. Similar to the topology set-up, a concentrated mass was used for the P0 EM and a belt force was applied at the P0 pulley location. The concentrated mass connected to the mounting bolts (shown in yellow) through RBE2 elements. To constrain the motion of bodies relative to each other, the mesh was copied from one surface to another where surfaces were touching. The model was fixed using fixed constraints at the three bolting locations to the ICE block. The bolted connections were modeled as shown in Figure 18. The bolt itself was modeled as a 1D element and connected to the mount surface using RBE2 elements.

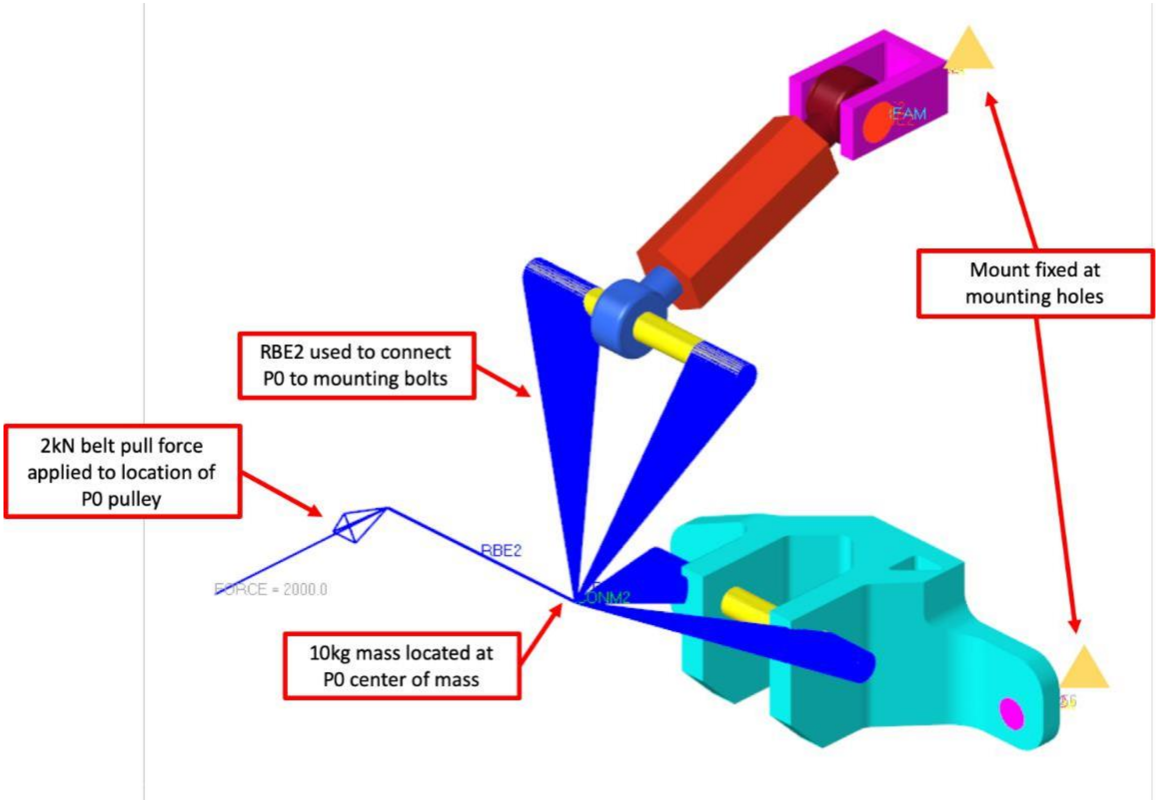

Figure 17. Model set-up in Altair HyperWorks

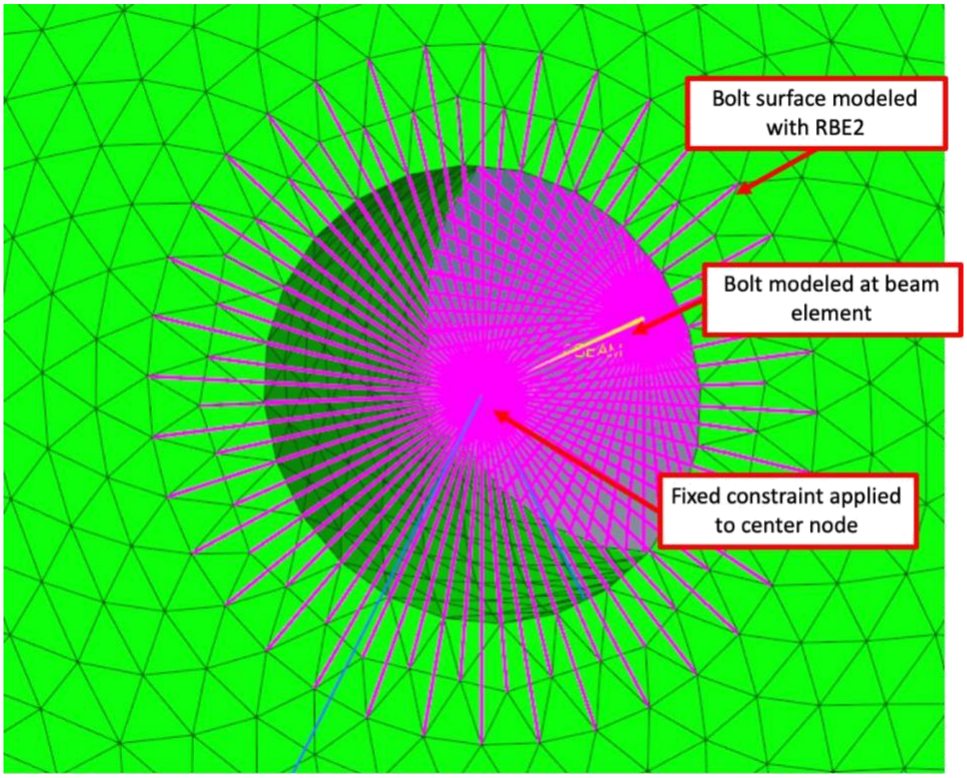

Figure 18. Model of bolted connection

The results of the FEA can be seen in Figure 19, which is a combined result from all three inertial loading cases. The highest stress area on the bottom mount is on the back of the mount where it is bolted to the ICE (Figure 20). Due to the high stress around the bolt location, aluminum 7075-T6 was chosen as the final material for the bottom mount, which allows for a 1.85 factor of safety.

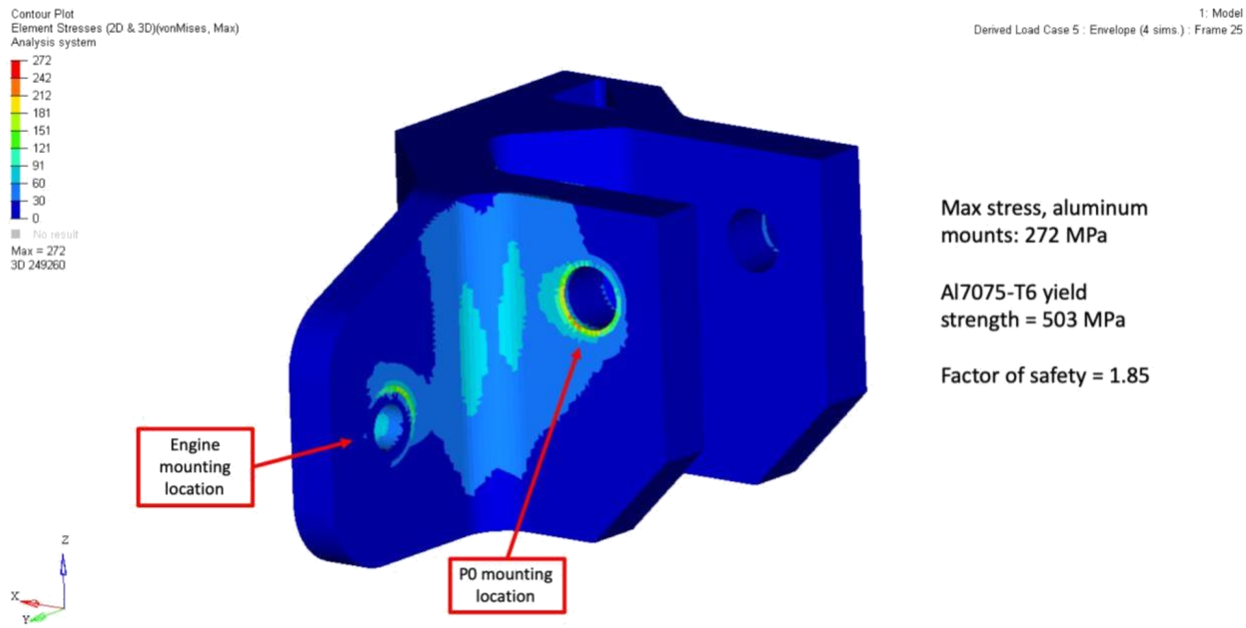

Figure 19. FEA results, P0 bottom mount

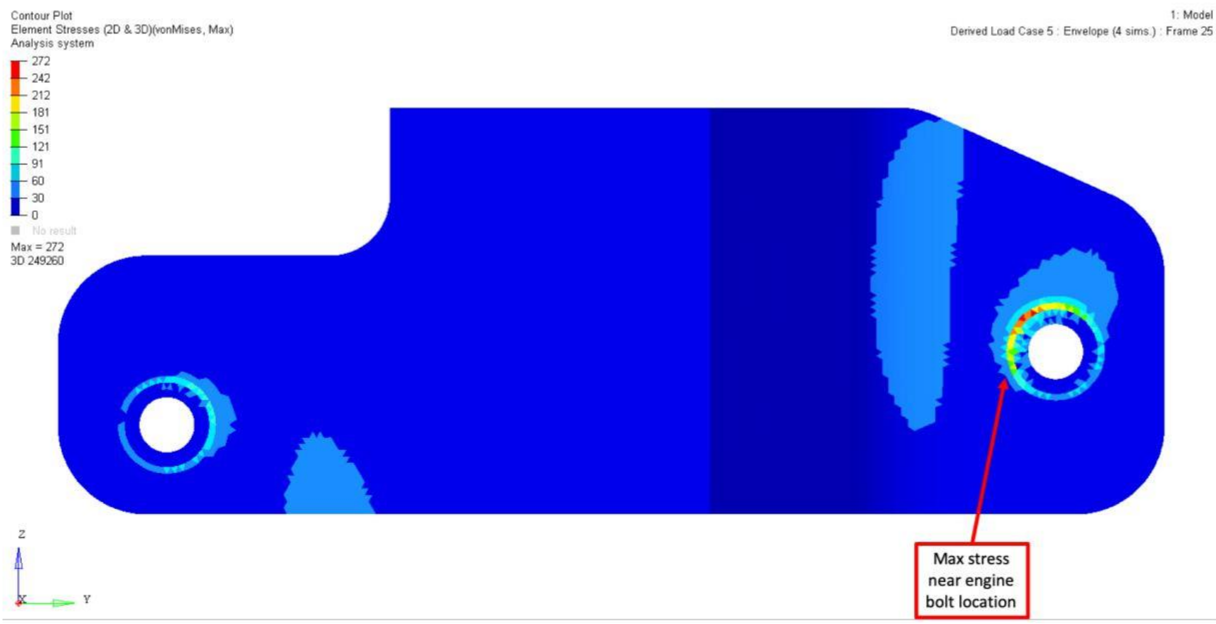

Figure 20. FEA results, rear view of bottom mount

The peak stress of the top mount (Figure 21) was only 118 MPa, so aluminum 6061-T6 was used, which allows for a 2.3 factor of safety.

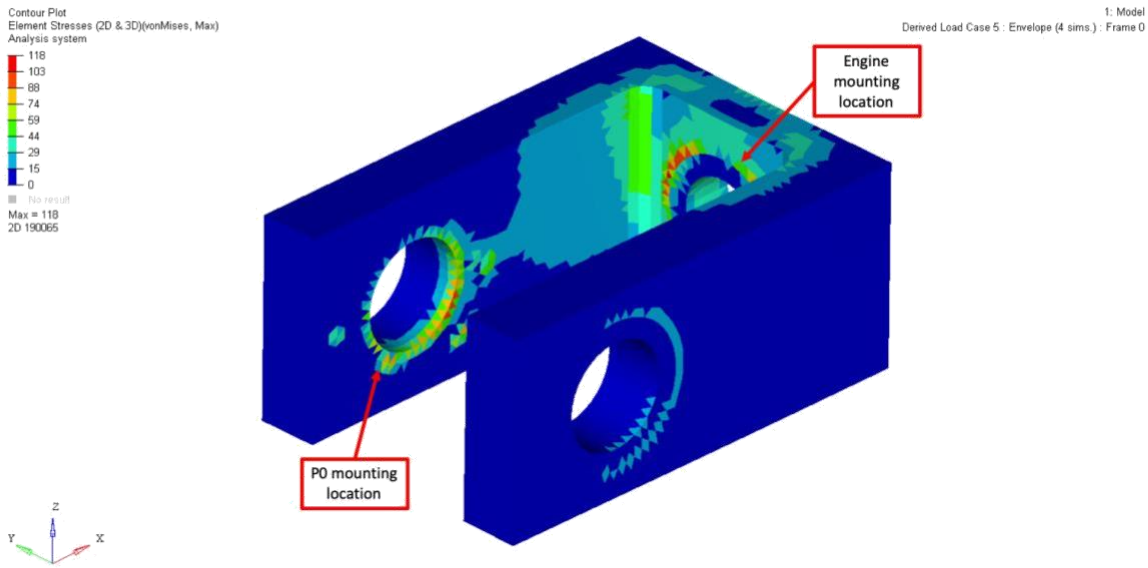

Figure 21. FEA results, top mount

5.1.4 P0 EM Mount: Vehicle Integration

Before the mount was fabricated, a 3D printed version of the bottom mount was created to ensure the design fit with the existing ICE bolt holes and with the P0 mounting holes. Once the fitment was verified, the mount was fabricated using a waterjet to cut the top down profile, and then a manual mill was used to flatten mounting surfaces and drill holes. The 3D printed mount and fabricated bottom mount can be seen in Figure 22.

The top mount and turnbuckle were also fabricated in-house and installed on the vehicle as shown in Figure 23. The turnbuckle features two rod ends and a hex rod. One rod ends has right hand threads while the other has left hand threads. Similarly, half of the hex rod has mating right hand threads while the other half has left hand threads. When the hex rod is turned, the rod ends are either pushed out or pulled in, allowing for the center to center distance of the P0 pulley and crankshaft pulley to be adjusted. When the belt tension is set, jam nuts are used to secure the hex rod in place to maintain the set tension.

Figure 22. 3D printed and fabricated aluminum bottom mounts

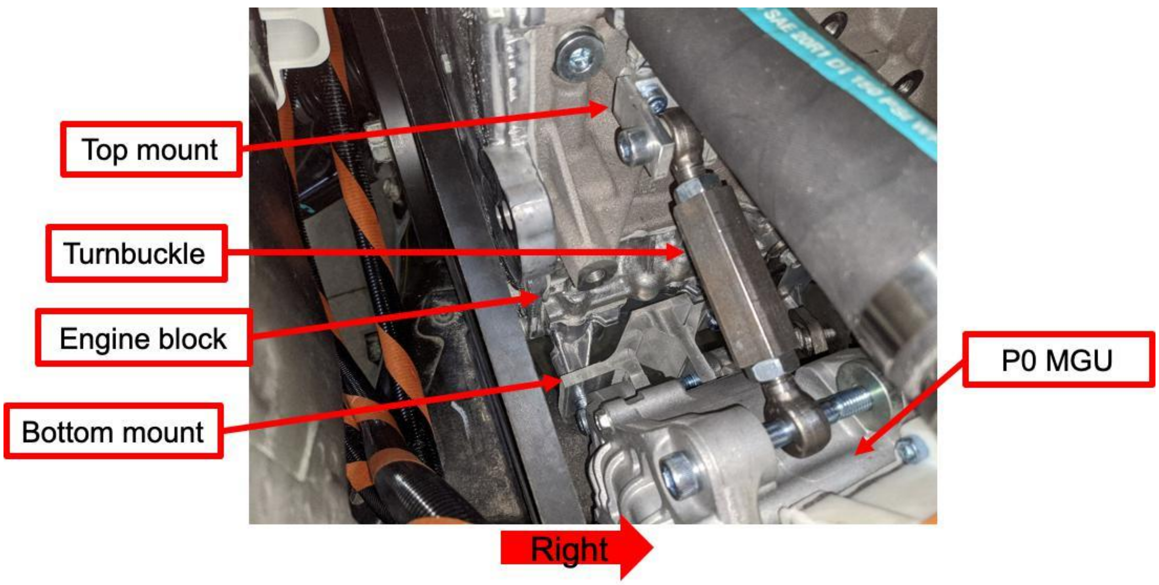

Figure 23. P0 EM integrated in vehicle

CHAPTER 6. ELECTRICAL SUBSYSTEMS

The EcoCAR vehicle features both a high voltage (300 V) and a low voltage (12 V) system that was added by the team. The LV system interfaces with the existing stock LV network that came with the Blazer, but the HV system is isolated.

6.1 Overview of LV Power Distribution and Components

The stock 12 V system in the car was largely unaltered during the vehicle's build. In order to branch off of the stock 12 V system, a 2 pole high power distribution module (HPDM) made by LittleFuse was used to distribute fused power to both the CAVs system and the hybrid system components. The HPDM's input is connected to the stock 12V distribution plate. It has one unfused output, which is unused, and two fused outputs, which are used for the CAVs and hybrid systems.

The CAVs fused output goes directly to a disconnect switch, which allows all power to the CAVs components to be turned off when not in use. The output of the CAVs disconnect switch goes through a relay (which is controlled by the HSC) and then to a fusebox which distributes power to the various CAVs components.

The hybrid systems fused output goes to a second HPDM in the cargo area of the vehicle. The unfused output of this HPDM is also unused, but the two fused outputs connect to the DC/DC converter and two team added distribution boxes.

The distribution boxes chosen are Eaton multiplexed vehicle electrical centers (mVECs), which communicate via one of the team added CAN busses. These distribution boxes were chosen because the digital output power of the MABx was not enough to switch automotive grade relays. An added benefit of these distribution boxes is that several digital out pins on the MABx are now available for other uses. Each mVEC features 8 relays as well as 8 fused outputs. In addition to the two power connectors, each mVEC has a CAN connector, which contains the pins for the CAN wiring as well as ignition power, so the mVECs can be turned on when necessary. The outputs of the mVECs go to all of the team-added components requiring 12 V power, including inverters, the HEV4 battery, thermal system, and other components.

The car's thermal systems feature two fans (controlled together), two independently controlled pumps for the HV cooling system, and an electric water pump for the ICE. The speed of each of these four components is controlled with pulse width modulation (PWM) that is output from the MABx. The PWM signal from the MABx and 12 V power from the mVEC is sent to a dual mosfet circuit board that performs the switching needed to control the components. The mosfet boards perform low side switching, which essentially ground and unground the circuit based on the duty cycle input. For example, if the duty cycle is 100%, the circuit is always grounded. If the duty cycle is only 50%, the circuit is only grounded 50% of the time and the remaining time it is ungrounded (and thus open). Unlike other components on the vehicle that are grounded to the chassis, each of the four PWM controlled components are grounded to the mosfet boards.

6.2 Design of LV System and Routing

To aid in the development of the LV system, a harness table was made that contains the name of each component, the mating pins on the component's connector(s), and the terminating location of the wire connecting to each pin. An excerpt of this table is shown in Figure 24. Column A is the start device, or where the wire will start. Each row of column

B is a separate pin on the start device, with column H identifying the pin on the device connector. Column J contains the end device for each of the wires, and as seen here, the wires starting on one component can go to many different components throughout the vehicle. The end component pin is identified in column K and the type of connector is detailed in column L.

A	B	D	E	F	G	H	I	J	K	L	M
	Function	Color	Gauge (AWG)	Signal Type	Start Device	Device Pin	Start Connector Type	End Device	End Pin	End Connector Type	Notes
mVec 1 (PWR Out)	HEV4 PWR, relay 1	Red	16	12V	mVec 1	1D	Connector 1, Blue	HEV4 BSM, Blower	X3-10 (BSM), 5 (blower)	Splice -> X3 and blower connectors	Supplies power to splice at BSM that send power to BSM and blower
	Magna PWR, relay 2	Red	16	12V		1B		Magna PWR	J1-M1, J1-M2 (gateway), M2, M3, M4 (inverter)	Splice -> X5 and J1 connectors	Sends power to GCM80 and Inverter
	Rinehart PWR, relay 3	Red	16	12V		1E		Rinehart	J2-8, J2-23	Splice -> J2 connector	
	AC PWR, relay 4	Red	16	12V		1C		AC	2	AC LV conn.	

Figure 24. Harness table excerpt

The information in this table was translated to physical wiring in the car by various methods. The preferred method, which was not utilized, is to create the wiring harness in CAD, obtain the length from the routing object, cut wires to the appropriate length, assemble the harness, and install it in the car. Due to the fast-paced structure of the competition, very few of the LV harness runs were created in the vehicle's CAD assembly. The alternative approach taken by the team was to use string to map out wire routing and then cut wires to length based on the length of the string. In one instance, string was used to map out a harness with multiple connectors. Once all of the connector locations were identified with the string, it was pinned to a makeshift formboard and the entire harness was created on the formboard before being installed on the car. In general, the string method worked, but most wires were cut long to avoid any errors and to allow for slight rerouting as necessary. This led to a large amount of messy excess wire that needs to be cut to length once all components are installed in their final locations.

6.3 CAN Communication Network

The majority of the team-added components communicate through a controller area network (CAN) system that was developed by Bosch in the 1980s for use in vehicles. CAN is heavily used in vehicles because it allows several control modules to share a communication bus as opposed to each one having a unique hardware connection to the main control module. This simplifies wire routing and reduces the overall length of wire within the vehicle. Most CAN networks in modern vehicles feature two wires: CAN high and CAN low. The voltage difference between these two wires carries signals throughout the vehicle that contain information and messages for other components in the vehicle. The primary team-added CAN bus has the following nodes: MicroAutoBox II (MABx), HEV4 battery pack, P4 inverter, SIM100 ground fault monitoring device, and the P0 inverter. A second CAN bus, the diagnostics bus, allows for data to be logged from the MABx and is also used to control the relays housed in the Eaton mVECs.

The team-added CAN hardware network can be seen in Figure 25. To mitigate the effects of electromagnetic interference (EMI) from the HV wires routed throughout the vehicle, all of the CAN wiring is twisted pair and shielded. The shielding is then grounded to chassis to provide protection against the EMI (grounds not shown in schematic). The team-added CAN bus features 120 W resistors in the Rinehart inverter and the Magna Gateway, which are required for successful CAN communication. The MABx can also be programmed to have a terminating resistor if either of the other two components are ever removed from the bus.

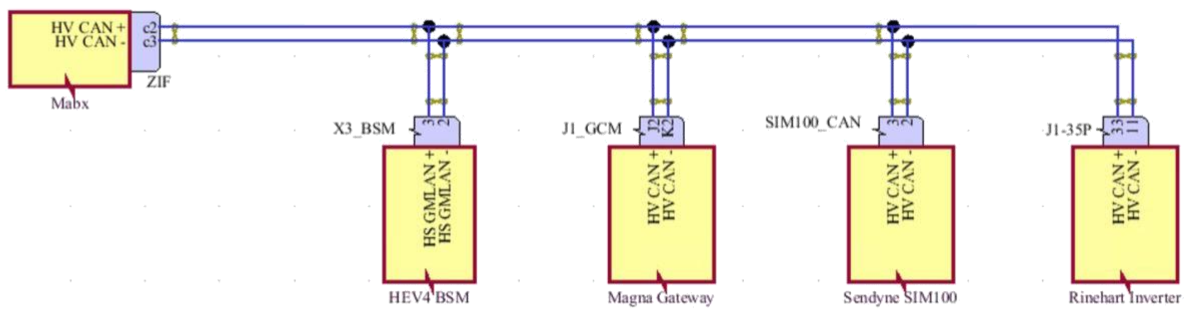

Figure 25. Team-added HV CAN Bus

CHAPTER 7. CONCLUSIONS AND FUTURE WORK

The work documented in this thesis was done to select a HEV architecture specifically designed for the MaaS market. The fuel economy and performance results from the Simulink vehicle model were used with other metrics deemed important to the team, such as vehicle cost and the risk associated with each architecture. Additional considerations for the MaaS market that played an important role in the architecture selection included start-stop functionality, stationary charging, and the ability to drive continuously for long periods of time. Based on these considerations and modeling results, a P0P4 through-the-road HEV was chosen with a GM 2.5 L naturally aspirated ICE, 1.5 kWh HV battery pack, 30 kW P0 EM, and 50 kW P4 EM.

By the conclusion of the second year of the EcoCAR Mobility Challenge competition (Spring 2020), the Georgia Tech team completed approximately 85% of the mechanical and electrical integration tasks required for the vehicle to operate. All propulsion system components are installed in the vehicle, all HV wire routing is complete and has passed safety checks, LV wire routing for all installed subsystems is complete, and the team-added thermal system for the hybrid propulsion system components is installed. Testing and refinement of the team-added subsystems has started, but still requires significant work to arrive at a fully functional and reliable vehicle. In addition to finishing the intended integration tasks for Year 2, the team was fortunate to have a vehicle technical inspection performed by competition organizers. The notes and feedback from this inspection will be remediated and will be helpful in building the vehicle to a safe and operable state. Upon completion of the vehicle hybridization, the focus of the propulsion systems integration team will turn largely towards vehicle testing and refinement of what is currently installed on the vehicle. It is expected that some propulsion system mounts will require a redesign based on their performance during vehicle testing and competition. Lessons learned from existing mounts and an in-depth analysis, including fatigue loading, will be considered when redesigning future propulsion system components.

From a vehicle controls perspective, the energy management strategy described in this paper requires significant refinements in order to work on a real-time vehicle controller. During preliminary vehicle testing, a rules-based controller will be deployed while a refined optimal controller can be developed for deployment on the supervisory controller by the end of Year 3. Additional testing of the thermal systems, vehicle start-up and shut down, driver switches to control vehicle modes, and interface with the CAVs compute system will be the focus of the controls and mechanical team for Year 3.

REFERENCES

[1] C. Vagg, C. J. Brace, R. Wijetunge, S. Akehurst and L. Ash, “Development of a new method to assess fuel savings using gear shift indicators,” 2012.

[2] Duff and Phelps, “Market Share of Hybrid/Electric Vehicles (EVs) Poised to Increase,” 2019.

[3] R. Kumar, “Electric Vehicle Market by Type (Battery Electric Vehicle, Hybrid Electric Vehicle, and Plug-in Hybrid Electric Vehicle), and Vehicle Type (Passenger Car, Commercial Vehicle, and Two-Wheeler) - Global Opportunity Analysis and Industry Forecast, 2018-2025,” Allied Market Research, 2019.

[4] M. Colias, “GM, Volkswagen Say Goodbye to Hybrid Vehicles,” Wall Street Journal, 2019.

[5] C. Mulley, “Mobility as a Service (MaaS) - does it have critical mass?,” *Transport Reviews,* pp. 247-251, 2017.

[6] MaaS Alliance, “MaaS Alliance,” [Online]. Available: https://maas-alliance.eu/homepage/what-is-maas/. [Accessed 18 2 2020].

[7] R. Chase, “Does Everyone in America Own a Car,” [Online]. Available: https://photos.state.gov/libraries/cambodia/30486/Publications/everyone_in_america_own_a_car.pdf. [Accessed 19 2 2020].

[8] P. S. Pretti Wadwani, “Car Sharing Market Size By Model,” Global Market Insights, 2017.

[9] Energias Market Research, “Global Ridesharing Market Outlook,” Energias Market Research, Buffalo, 2018.

[10] The MathWorks, Inc., “Documentation: Vehicle Body Total Road Load,” 2019. [Online]. Available: https://www.mathworks.com/help/autoblks/ref/vehiclebodytotalroadload.html?s_tid=srchtitle.

[11] S. Onori, L. Serrao and G. Rizzoni, “Hybrid Electric Vehicles: Energy Management Strategies,” *Springer Briefs in Electrical and Computer Engineering,* pp. 65-87, 2016.